TommaTech GmbH
Bürgerplatz 5 - 85748 Garching Munich / Germany
Tel: +49 89 1250 36 860
E-mail: mail@tommatech.de

614.00770.00

Trio-Hybrid K-Series User Manual

5.0KW-15.0KW

EN

Copyright Declaration

The copy right of this manual belongs to TommaTech GmbH. Any corporation or individual should not plagiarize, partially or fully copy it (including software, etc.) , and reproduction or distribution of it shall not be allowed in any form or by any means. All rights reserved. TommaTech GmbH reserves the right of final interpretation. The contents are subject to change without prior notice.

www.tommatech.de

Contents

1 Note on this Manual 03
1.1 Scope of Validity 03
1.2 Target Group 03
1.3 Symbols Used 03
1.3.1 Important Safety Instructions 04
1.3.2 Explanation of Symbols 09
1.3.3 EMC and LVD Directives 11

2 Introduction 12
2.1 Basic Features 12
2.2 Electrical Block Diagram of a Solar Hybrid Solution 12
2.3 Work Modes 14
2.4 Dimension 16
2.5 Inverter Terminals 16

3 Technical Data 18
3.1 DC Input 18
3.2 AC Output/Input 19
3.3 Battery 19
3.4 Efficiency, Safety and Protection 20
3.5 EPS (Off-Grid) Output 20
3.6 Further Inverter Data 20

4 Installation 21
4.1 Check for Transport Damage 21
4.2 Packing List 21
4.3 Installation Precautions 23
4.4 Tool Preparation 24
4.5 Installation Site Conditions 26
4.5.1 Basic Installtion Requirements 26
4.5.2 Installation Requirements 26
4.5.3 Installation Space Requirements 27
4.6 Mounting 28

5 Electrical Connections....31
5.1 PV Connection....31
5.2 Grid Port and EPS (Off-Grid) Output Connection....35
5.3 EPS (Off-Grid) Block Diagram....38
5.4 Battery Connection....44
5.5 Additional Inverter Connections....48
5.5.1 Introduction to DRM Communication....48
5.5.2 Smart Meter/CT Communication....49
5.5.3 Parallel Communication....52
5.5.4 COM Communication....58
5.5.5 Communication Connection Steps....60
5.6 Grounding (Mandatory)....69
5.7 Monitoring Connection....72
5.8 Check All Below Steps Before Starting Inverter....74
5.9 Inverter Operation....75

6 Firmware upgrading....79

7 Setting....83
7.1 Control Panel....83
7.2 Menu Structure....84
7.3 LCD Operation....85

8 Troubleshooting....111
8.1 Trouble Shooting....111
8.2 Routine Maintenance....117

9 Decommissioning....118
9.1 Disassemble the Inverter....118
9.2 Packaging....118
9.3 Storage and Transportation....118
9.4 Waste Disposal....118

10 Disclaimer....119

1 Notes on this Manual

1.1 Scope of Validity

This manual is an integral part of Trio-Hybrid K-Series, it describes the assembly, installation, commissioning, maintenance and failure of the product. Please read it carefully before operating.

Trio-Hybrid -5.0K	Trio-Hybrid -6.0K	Trio-Hybrid -8.0K	Trio-Hybrid -10.0K	Trio-Hybrid -12.0K	Trio-Hybrid -15.0K

Note: **"Trio-Hybrid K"** Series refers to energy storage inverters that support photovoltaic grid-connected operation.

"5.0K" means 5.0kW.

Keep this manual available at any time.

1.2 Target Group

This manual is for qualified electricians. The tasks described in this manual can only be performed by qualified electricians.

1.3 Symbols Used

The following types of safety instructions and general information appear in this document as described below:

Danger!
"Danger" refers to a dangerous situation that, if not avoided, will result in a high level of risk such as serious injury or even death.

Warning!
"Warning" indicates a dangerous situation, which, if not avoided, may result in serious injury or death.

Caution!
"Caution" indicates a hazardous situation which, if not avoided, could result in minor or moderate injury.

Note!
"Note" provides tips that are valuable for the optimal operation of our product.

1.3.1Important Safety Instructions

Danger!

Danger to life due to high voltages in the inverter!
The personnel responsible for the installation, electrical connection, debugging, maintenance and fault handling operation of this product need to be trained, master the correct operation method, have the corresponding electrician qualification and safety operation knowledge.

Caution!

When the inverter is working, it is strictly forbidden to touch the shell. The temperature of the shell is high and there is a risk of scalding.

Caution!

Radiation may be harmful to health!
Do not stay for a long time and keep at least 20 cm away from the inverter.

Note!

Ground PV system.
Finish PV modules and photovoltaic system grounding in accordance with local requirements to achieve optimal protection of systems and personnel.

Warning!

Ensure that the input DC voltage is below the inverter limit. Excessive DC voltage and current may cause permanent damage or other losses to the inverter, which is not covered by the warranty.

Warning!

Before performing maintenance, cleaning or operation on the circuit connected to the inverter, authorized maintenance personnel must first disconnect the AC and DC power supplies of the inverter.

Warning!
The inverter can not be operated when it is running.

Warning!
Risk of electric shock!

Strictly follow relevant safety specifications for product installation and testing. During installation, operation or maintenance, please read carefully and follow the instructions and precautions on the inverter or user manual. If the operation is incorrect, it may cause personal and property losses. Please keep the user manual properly after use.

This inverter can only use the accessories sold and recommended by TommaTech, otherwise it may cause fire, electric shock or casualties. Without the authorization of our company, you may not open the inverter cover or replace the inverter parts, otherwise the warranty promise of the inverter will be invalid.

The use and operation of the inverter must be carried out in accordance with the instructions in this manual, otherwise this protection as well as the warranty of the inverter will fail.
During operation, the inverter surface temperature may exceed 60°C, please make sure the inverter cools down before touching, and make sure children can not touch.

When exposed to sunlight, photovoltaic arrays generate dangerous high DC voltages. Please follow our instructions, otherwise it will be life-threatening.

All DC and AC power sources must be disconnected from the inverter for at least 5 minutes before any wiring or electrical operation is performed on the inverter to ensure complete isolation of the inverter and avoid electric shock.

A photovoltaic module used on the inverter must have a IEC61730A rating, and the total open circuit voltage of the photovoltaic string / array must be lower than the maximum rated DC input voltage of the inverter. Any damage caused by photovoltaic over voltage is not covered by warranty.

Installation position should be apart from wet environment and corrosive substances.

After the inverter is disconnected from national grid and the PV power supply, there will be a certain amount of residual current for a short period of time, be cautious or it may lead to serious personal injury and even high risk of death. Use a multimeter (impedance at least1 MΩ) to measure the voltage between the UDC and the UDC- to ensure that the inverter port is discharged below the safe voltage before starting operation (35 VDC).

➢ Surge protection devices (SPDs) for PV installation

Warning!

Over-voltage protection with surge arresters should be provided when the PV power system is installed.
The grid connected inverter is fitted with SPDs in both PV input side and MAINS side.

Direct or indirect lightning strikes can cause failures. Surge is the main cause of lightning damage to most devices. Surge voltage may occur at photovoltaic input or AC output, especially in remote mountain areas where long distance cable is supplied.

Please consult professionals before installing SPDs.

The external lightning protection device can reduce the influence of direct lightning strike, and the lightning protection device can release surge current to the earth.

If the building with external light protection device is far away from the inverter location, in order to protect the inverter from electrical and mechanical damage, additional external lightning protection equipment should also be installed for the inverter..

In order to protect the DC side of the system, two-stage surge protection equipment is needed between the DC cables of inverter and the photovoltaic module.

In order to protect the AC side of the system, level 2 surge protection equipment should be installed at the AC output, located between the inverter and the grid. Installation requirements must comply with IEC61643-21 standard.

All DC cables shall be installed as short as possible, and the positive and negative cables of the same input need to be bundled together to avoid loops in the system. Minimum distance installation and binding requirements also apply to auxiliary grounding and shielding grounding conductors.

➢ Anti-Islanding Effect

The islanding effect means that when the grid is cut off, the grid-connected power generation system fails to detect the power outage and still supplies power to the grid. This is very dangerous for the maintenance personnel on the transmission lines.

Trio-Hybrid K Series inverter's use active frequency offset method to prevent islanding effect.

➢ PE Connection and Leakage Current

• All inverter's incorporate a certified internal Residual Current Monitoring (RCM) in order to protect against possible electrocution and fire hazard in case of a malfunction in the PV array, cables or inverter.
There are 2 trip thresholds for the RCM as required for certification (IEC 62109-2:2011).
The default value for electrocution protection is 30mA, and for slow rising current is 300mA.

• The inverter, with built-in RCM, will exclude possibility of DC residual current to 6mA, thus in the system an external RCD (type A) can be used (⩾30mA).

> Warning!
> High leakage Current!
> Earth connection essential before connecting supply.

• A faulty ground connection can result in equipment failure, personal and death injuries, and electromagnetic interference.
• Ensure correct grounding according to IEC62109 and conductor diameters according to STANDARD specifications.
• Do not connect the grounding end of the equipment in series to prevent multi-point grounding.
• Electrical appliances must be installed in accordance with the wiring rules of each country.

For United Kingdom
• The installation that connects the equipment to the supply terminals shall comply with the requirements of BS 7671.
• Electrical installation of PV system shall comply with requirements of BS 7671 and IEC 60364-7-712.
• All protective devices cannot be changed.
• User shall ensure that equipment is so installed, designed and operated to maintain at all times compliance with the requirements of ESQCR22(1)(a).

➢ Battery Safety Instructions

TommaTech Trio-Hybrid K Series inverter should pair with high voltage batteries. For the specific parameters such as battery type, nominal voltage and nominal capacity etc., please refer to section 3.3.

1.3.2 Explanation of Symbols

This section gives an explanation of all the symbols shown on the inverter and on the type label.

- Symbols on the Inverter

Symbol	Explanation
	Operating Display
	Battery status
	An error has occurred, please inform your installer immediately

- Symbols on the Inverter Label

Symbols	Explanation
CE	CE mark. The inverter complies with the requirements of the applicable CE guidelines.
	RCM remark.
UK CA	UKCA mark. The inverter complies with the requirements of the applicable UKCA guidelines.
UK NI	UKNI mark. The inverter complies with the requirements of the applicable UKNI guidelines.
	Beware of hot surface. The inverter can become hot during operation. Avoid contact during operation.

	Danger of high voltages. Danger to life due to high voltages in the inverter!
	Danger. Risk of electric shock!
	Observe enclosed documentation.
	The inverter can not be disposed together with the household waste. Disposal information can be found in the enclosed documentation.
	Do not operate this inverter until it is isolated from battery, mains and on-site PV generation suppliers.
5min	Danger to life due to high voltage. There is residual voltage existing in the inverter after powering off, which needs 5 min to discharge. Wait 5 min before you open the upper lid or the DC lid.

1.3.3 EMC and LVD Directives

This chapter describes the requirements of the European low voltage regulations, including safety instructions and system licensing conditions, the user must comply with when installing, operating, and maintaining the inverter. Otherwise it will cause personal injury or death, and the inverter will cause damage.

Please read the manual carefully before operating the inverter. If you do not understand "danger", "warning", "caution" and the description in the manual, please contact the manufacturer or service agent before installing and operating the inverter. Generally:

TommaTech On-Grid inverters comply with the low voltage directive (LVD) 2014/35/EU and Electromagnetic compatibility directive (EMC) 2014/30/EU.
The detection of components is based on:
EN 62109-1:2010 ;
EN 62109-2:2011;
IEC 62109-1(ed.1) ;
IEC62109-2(ed.1) ;
EN 61000-6-3: 2007+A:2011;
EN 61000-6-1: 2007 ;
EN 61000-6-2: 2005 ;

For installation in solar solutions, it is necessary to make sure that the whole system complies with the requirements of EC(2014/35/EU, 2014/30/EU, etc.) before commencing the installation (i.e. to start the operation). The assembly shall be installed in accordance with the statutory wiring rules. Please install and configure the system in accordance with safety rules, including the use of specified wiring methods. The installation of the system can only be done by professional assemblers who are familiar with safety requirements and EMC. The assembler shall ensure that the system complies with the relevant national laws.

The individual subassembly of the system shall be interconnected by means of the wiring methods outlined in national/international such as the national electric code (NFPA) No. 70 or VDE regulation 0107.

2.3 Work Modes

Based on the customer's demands, the inverters can be operated in the following modes:

Self Use Mode

The self-use mode is suitable for areas with low feed-in subsidies and high electricity prices.

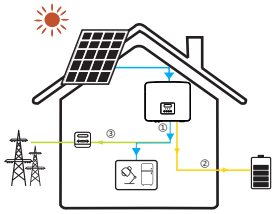

① Sufficient Solar Power
Solar will power the loads at first priority while excess solar energy will be stored in the batteries. If the battery is fully charged, the excess energy will be sold to national grid.
Please note: The output to the grid can be limited through "zero feed-in" or "feed-in" options.
(PV > Load, PV → Load → Battery → Grid)

② Insufficient Solar Power
Depending on the settings, there are two options:
Solar will power the loads at first priority. The required balance energy will be taken from public power supply. The batteries will not be used.
(PV < Load, PV + Grid → Load)
Solar will power the loads at first priority. The required balance energy will be taken from the batteries. However, if the power from the batteries not enough, the remaining power will be taken from the grid.
(PV < Load, PV + Battery + Grid → Load)

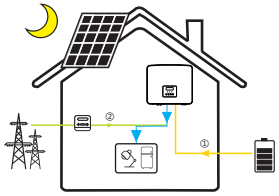

③ No Solar Power
Depending on the preferences, there are two options:
National grid supplies the loads at first priority and can also charge the battery;
(PV = 0, Grid → Load + Battery)
The battery will power the home loads at first priority. If the battery power is not enough, the remaining power will be taken from the grid. The inverter will enter into the standby state.
(PV = 0, Battery + Grid → Load)
Battery min SOC can be set to: 10%-100%;
Charge battery to min SOC can be set to:10%-100%.

Feed-in Priority Mode

The Feed-in Priority mode is suitable for areas with high feed-in subsidies, and can be controlled with feed-in power limitations.

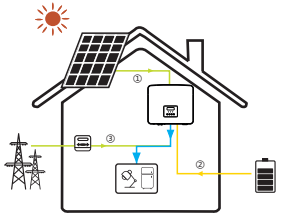

① Sufficient Solar Power
Depending on the preferences, there are two options:
Solar will power the loads at first priority while excess solar energy will be stored in the batteries up to the chosen limit. After that, the excess energy will be sold to national grid. However, if the allowed feed-in electricity is limited, the inverter will charge the batteries further after that limit is reached.
(PV > Load, PV → Load → Battery → Grid → Battery)

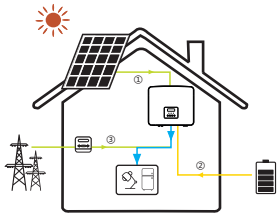

Solar will power the loads at first priority while excess solar energy will be sold to national grid.
(PV > Load, PV → Load → Grid)

② Insufficient Solar Power
Depending on the preferences, there are two options:
Solar will power the loads at first priority. The required balance power will be taken from national grid. The battery will not discharge.
(PV < Load, PV + Grid → Load)

Solar will power the loads at first priority. The required balance energy will be taken from the batteries. However, if the power from the batteries not enough, the remaining power will be taken from the grid.
(PV < Load, PV + Battery + Grid → Load)

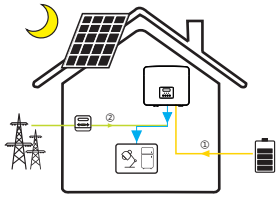

③ No Solar Power
Depending on the preferences, there are two options:
National grid supplies the loads at first priority and can also charge the battery;
(PV=0, Grid → Load + Battery)

The battery will power the home loads at first priority. If the battery power is not enough, the remaining power will be taken from the grid. The inverter will enter into the standby state.
(PV=0, Battery + Grid → Load)

Battery min SOC can be set to: 10%-100%;
Charge battery to min SOC can be set to:10%-100%.

Backup Mode

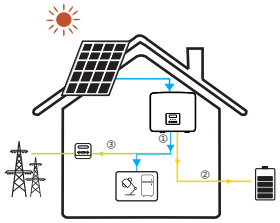

The Backup Mode is suitable for areas with frequent power outages.
Basically, it follows the same working logic as the Self Use Mode. However, this mode will maintain the battery capacity at a relatively high level according to the users' settings to ensure that the emergency loads can be used when the grid is off.

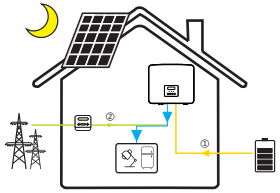

Battery min SOC can be set to:30%-100%.
Charge battery to min SOC can be set to:30%-100%.

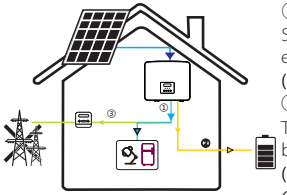

EPS (Off-Grid) Mode

In case of a power cut, the system will power EPS loads from PV and battery. However, please note that batteries must be installed to choose this mode.

① Sufficient Solar Power
Solar will power the loads at first priority while excess solar energy will be stored in the batteries.
(PV > Load, PV → Load → Battery)
② Insufficient Solar Power
The required balance energy will be taken from the batteries.
(PV < Load, PV → Load → Battery)
③ No Solar Power
The battery will power the emergency loads until the battery reaches the min SOC. After that, the inverter will enter into the idle mode.
(PV = 0, Battery → Load)
EPS (Off-Grid) SOC-min condition is adjustable within the range of 10%-25%.

Please note: if an AC power source is available, all working modes work normally as long as the battery SOC > 5%. However, if the battery charge rate is below 5%, PV or national grid will charge the battery to an SOC of 11% and then return to the working mode selected by the user to ensure a long life of the batteries.

Furthermore, if SOC ≤ MinSOC, the inverter does not enter EPS Mode. The inverter will charge the batteries from PV and will enter EPS mode when the inverter SOC ≥ 31%.

2.4 Dimensions

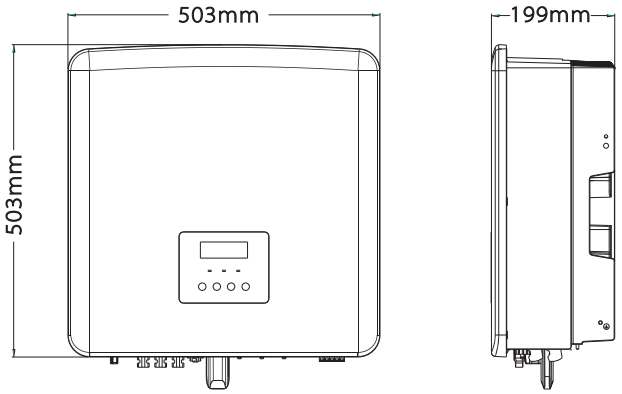

2.5 Inverter Terminals

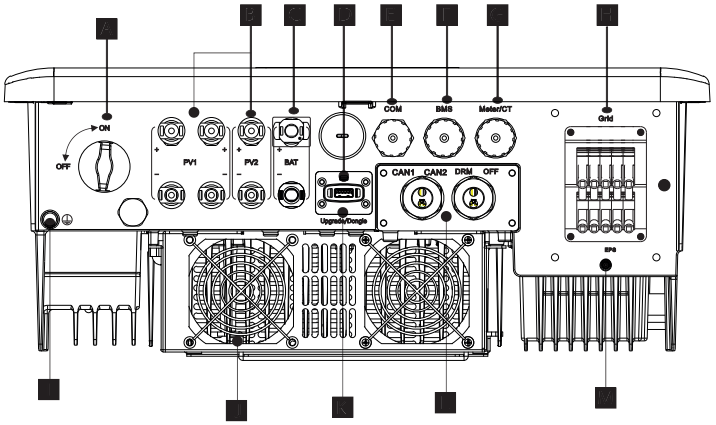

Object	Description
A	DC switch
B	PV connection ports
C	Battery connection port
D	USB port for upgrading
E	COM port
F	Battery communication port
G	Meter/CT port
H	Grid connection port
I	Ground connection port
J	Fans (only for Trio-Hybrid-15.0K)
K	External monitoring connection port
L	CAN1 and CAN2 are for parallel communication / OFF is for external shutdown/ DRM Port (only for Australia)
M	EPS (Off-grid) Output (Emergency Loads connection port)

Warning!
Qualified electricians are required for the installation.

3 Technical Data

3.1 DC Input

Model	Trio-Hybrid -5.0K	Trio-Hybrid -6.0K	Trio-Hybrid -8.0K	Trio-Hybrid -10.0K	Trio-Hybrid -12.0K	Trio-Hybrid -15.0K
Max. recommended DC power [W]	A:4000/B:4000	A:5000/B:5000	A:7000/B:5000	A:9000/B:6000	A:11000/B:7000	A:11000/B:7000
Max. DC voltage [V]	1000	1000	1000	1000	1000	1000
Nominal DC operating voltage [V]	640	640	640	640	640	640
Operating voltage typical [V]	180-950	180-950	180-950	180-950	180-950	180-950
Max. input current [A]	16/16	16/16	26/16	26/16	26/16	26/16
Max. short circuit current [A]	20/20	20/20	30/20	30/20	30/20	30/20
Start output voltage [V]	200	200	200	200	200	200
No. of MPP trackers	2	2	2	2	2	2
Strings per MPP tracker	A:1/B:1	A:1/B:1	A:2/B:1	A:2/B:1	A:2/B:1	A:2/B:1

3.2 AC Output/Input

Model	Trio-Hybrid -5.0K	Trio-Hybrid -6.0K	Trio-Hybrid -8.0K	Trio-Hybrid -10.0K	Trio-Hybrid -12.0K	Trio-Hybrid -15.0K
AC Output						
Nominal AC power [W]	5000	6000	8000	10000	12000	15000(PEA 14000)
Max. apparent AC power [VA]	5500	6600	8800	11000	13200	15000
Rated AC voltage [V]	415/240; 400/230; 380/220					
Rated grid frequency [Hz]	50/60					
Max. AC current [A]	8.1	9.7	12.9	16.1	19.3	24.1
Displacement power factor	1 (0.8 leading...0.8 lagging)					
Total harmonic distortion(THDi)	< 3%					
AC Input						
Rated AC power [W]	10000	12000	16000	20000	20000	20000
Rated grid voltage(range) [V]	415/240; 400/230; 380/220					
Rated grid frequency [Hz]	50/60					
Max. AC current [A]	16.1	19.3	25.8	32.0	32.0	32.0

3.3 Battery

Model	Trio-Hybrid -5.0K	Trio-Hybrid -6.0K	Trio-Hybrid -8.0K	Trio-Hybrid -10.0K	Trio-Hybrid -12.0K	Trio-Hybrid -15.0K
Battery type	TommaTech 5.8kWh and 3.0kWh Battery Series					
Battery Full Voltage [V]	180-650					
Maximum charge/discharge flow [A]	30A					
Communication interface	CAN/RS485					
Reverse connection protection	Yes					

3.4 Efficiency, Safety and Protection

Model	Trio-Hybrid -5.0K	Trio-Hybrid -6.0K	Trio-Hybrid -8.0K	Trio-Hybrid -10.0K	Trio-Hybrid -12.0K	Trio-Hybrid -15.0K
MPPT efficiency	99.9%	99.9%	99.9%	99.9%	99.9%	99.9%
European efficiency	97.7%	97.7%	97.7%	97.7%	97.7%	97.7%
Maximum efficiency	98.2%	98.2%	98.2%	98.2%	98.2%	98.2%
Max. battery charge efficiency (PV to BAT)(@ full load)	98.5%	98.5%	98.5%	98.5%	98.5%	98.5%
Max. battery discharge efficiency (BAT to AC)(@ full load)	97.5%	97.5%	97.5%	97.5%	97.5%	97.5%
Security & Protection						
DC SPD Protection	Integrated					
AC SPD Protection	Integrated					
Over/under voltage protection	YES					
Grid protection	YES					
DC injection monitoring	YES					
Back feed current monitoring	YES					
Residual current detection	YES					
Anti-islanding protection	YES					
Over load protection	YES					
Over heat protection	YES					
Array insulation resistance detection	YES					

Number	Quantity	Description
A	1	Trio-Hybrid K Series Inverter.
B	1	Wallmount Bracket
C	1	Waterproof connector
D	6	PV connector (positive*2 or 3, negative*2 or 3)
E	6	PV pin (positive*2 or 3, negative*2 or 3)
F	12	6 mm^2 Cable terminals
G	1	OT terminal (inverter grounding)
H	5	(Expansion bolt, Washer, Self-tapping bolt)
I	1	M5 inner hexagon bolt
J	3	Communication line adapter (COM/Meter/BMS)
K	2	Battery connection terminals (positive*1, negative*1)
L*	6	RJ 45 terminals
M	1	Manual
N	1	Quick Installation Guide
O	1	Warranty Registration Form
P	1	TommaTech Wi-Fi Dongle (optional)
Q	1	Meter (optional)
R	1	CT

Please Note:
"L": The inverter in Australia needs to be connected to DRM, which is 1 more communication line adapter than that in other countries.

"D" and "E": The included numbers are different for different power levels. For 5-6kW inverters, the number of positive and negative PV terminals and PV pin angles is 2. For 8- 15kW inverters, the number of positive and negative PV terminals and PV pin angles is 3.

4.3 Installation Precautions

The protection level of Trio-Hybrid K series inverter is IP 65, so that the inverter can be installed outdoors.
Check the installation environment and pay attention to the following conditions when installing:

- Do not expose to strong light.
- Do not touch flammable building materials.
- Do not approach flammable and explosive gases or liquids (e.g. where chemicals are stored).
- Do not touch cold air directly.
- Do not approach TV antenna or cable.
- Do not place in areas above 3000 meters above sea level.
- Do not install in precipitation or high humidity, which may cause corrosion or damage Internal devices.
- Keep the system out of reach of children.

If the inverter is installed in a narrow area, be sure to reserve appropriate space for heat dissipation.

- The ambient temperature of the installation site is -35°C~60°C.
- The maximum angle range of wall is ±5°.
- Avoid direct sunlight, rain and snow weather.

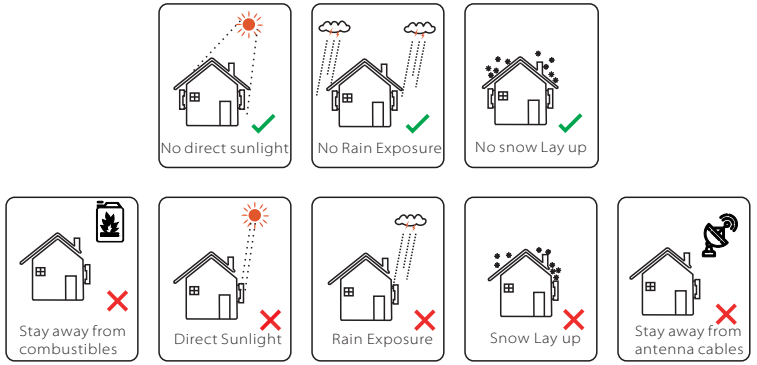

4.5 Installation Site Conditions

4.5.1 Basic Installation Requirements

Do not install the inverter near flammable materials.

Please install the inverter on a solid object that can withstand the weight requirements of the inverter and energy storage solution.

Please be careful not to install the inverter on a plasterboard wall or similar with poor sound insulation, so as not to to avoid noise and interference with the residents' life.

4.5.2 Installation Requirements

Install the inverter at a maximum back tilt of 5 degrees, the inverter can not be tilted forward, inverted, excessive back tilted or side tilted.

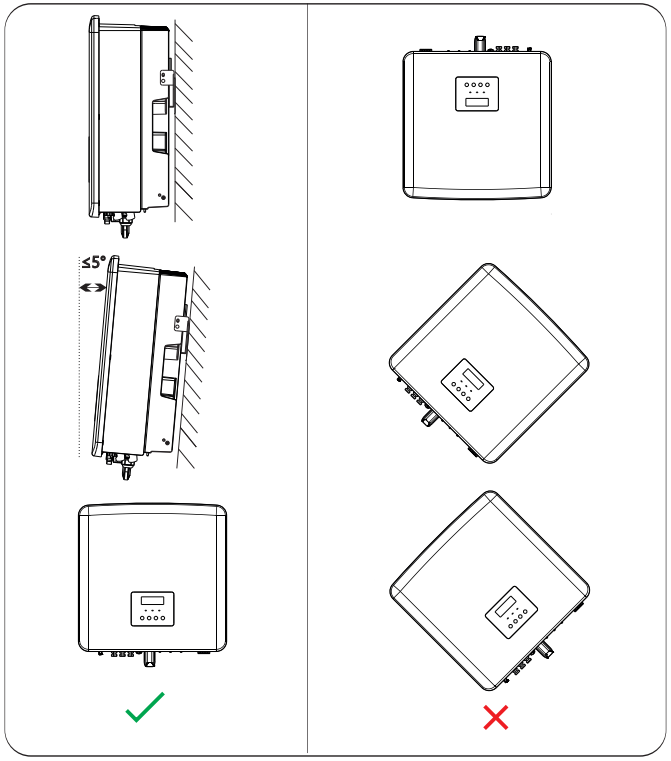

4.5.3 Installation Space Requirements

Reserve enough space when installing inverter (at least 300mm) for heat dissipation.

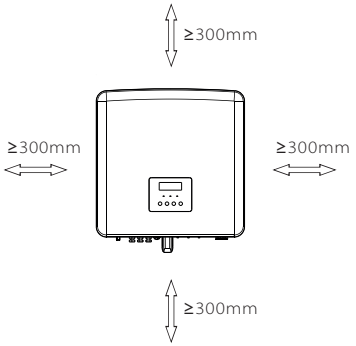

Reserved space dimensions

Position	Min Distance
Left	300mm
Right	300mm
Up	300mm
Down	500mm

For multi-inverter installation scenarios, the inline installation method is recommended. It is not recommended to install multiple inverters in stacks. However, if you have to stack the inverters due to space constraints, please install the inverters as illustrated below:

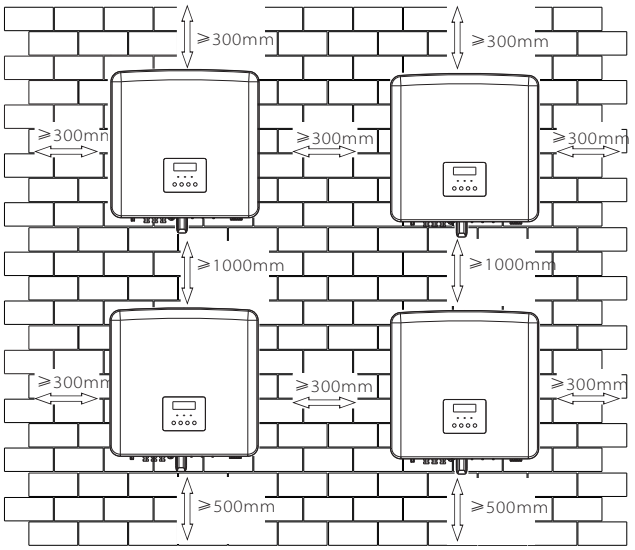

➢ Connection step

The solar input cables of Trio-Hybrid K Series need to be wired according to the following steps.

Step 1. Turn off the DC switch, connect the PV modules, prepare a 6 mm^2 PV cable, and find the PV (+) terminal and PV (-) connectors in the package.

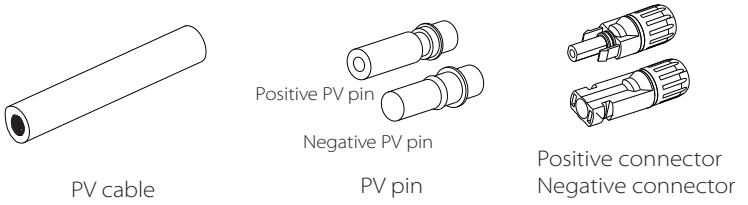

Step 2. Use a wire stripper to strip 7 mm insulation layer of the wire end.

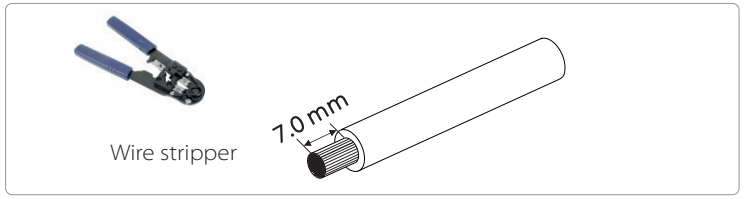

Step 3. Tighten the cable where the insulation layer was stripped and insert it into the PV pin (see Figure 1). Make sure all wires are inserted Into the PV pins (see Figure 2).

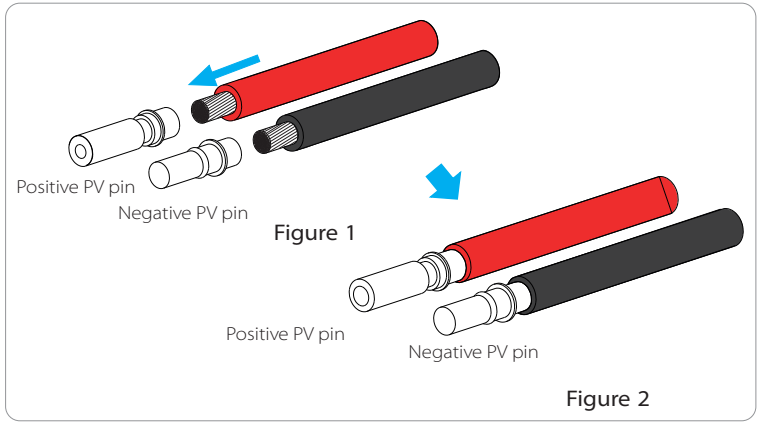

Step 4. Tighten the PV pin and the wiring harness with a crimping tool

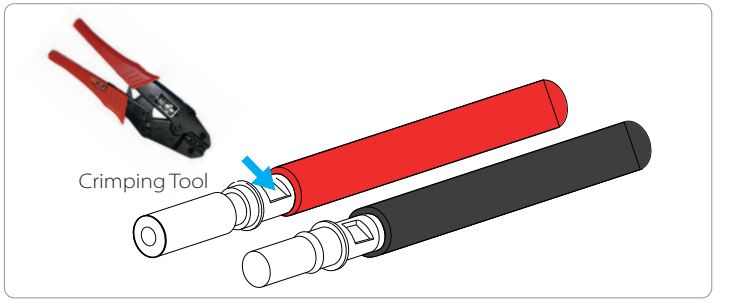

Step 5. The PV connector is divided into 2 parts - the plug and the fastening head. Insert the cable through the fastening head and the plug.
Please note that the red and black cables need different of plugs. Finally, force the cable into the plug until you hear a "click" sound, which indicates that the connection is complete.

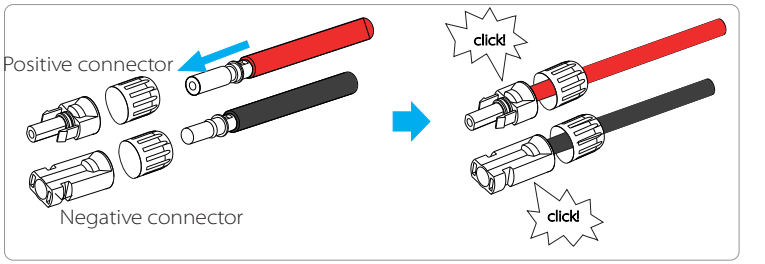

Step 6. Tighten the fastening head and insert the connectors into the corresponding positive and negative (PV-/PV+) ports of the inverter.

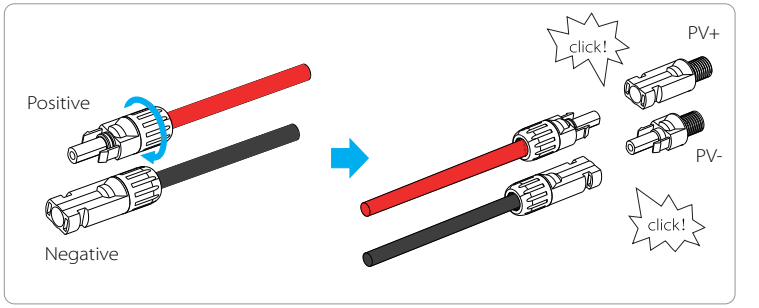

The location of the inverter's positive and negative (PV-/PV+) ports is as illustrated below:
Note: Before inserting the PV connectors, please switch on the DC breaker and use a multimeter to confirm the positive and negative poles of the PV string to prevent reverse connection.

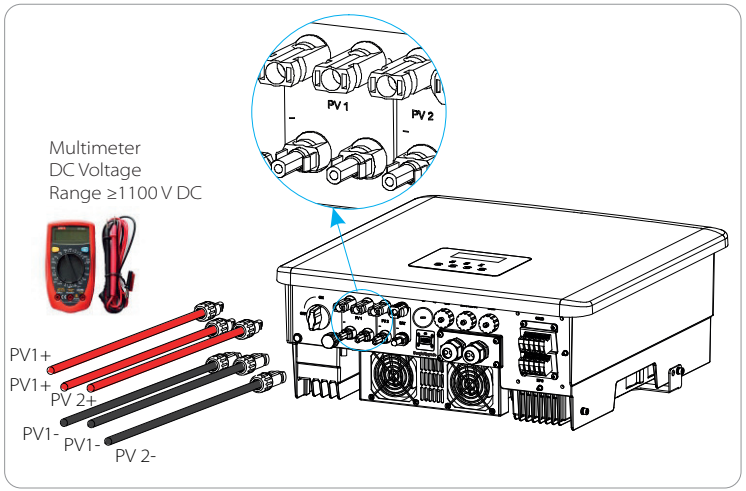

5.2 Grid Port and EPS (Off-grid) Output Connection

Trio-Hybrid K series inverter are three-phase inverter. Suitable for rated voltage 380/400/415V, frequency 50/60Hz. Other technical requests should comply with the requirement of the local public grid.

➢ Grid port connection

Recommended Grid Cable and Breaker Sizes

Model	Trio-Hybrid -5.0K	Trio-Hybrid -6.0K	Trio-Hybrid -8.0K	Trio-Hybrid -10.0K	Trio-Hybrid -12.0K	Trio-Hybrid -15.0K
Cable (copper)	4~6mm²	4~6mm²	4~6mm²	5~6mm²	5~6mm²	5~6mm²
Micro-Breaker	20A	20A	32A	40A	40A	40A

Recommended EPS Cable and Breaker Sizes

Model	Trio-Hybrid -5.0K	Trio-Hybrid -6.0K	Trio-Hybrid -8.0K	Trio-Hybrid -10.0K	Trio-Hybrid -12.0K	Trio-Hybrid -15.0K
Cable (copper)	4~6mm²	4~6mm²	4~6mm²	4~6mm²	4~6mm²	4~6mm²
Micro-Breaker	16A	16A	20A	25A	32A	32A

Please note that no loads should be connected directly to the inverter.

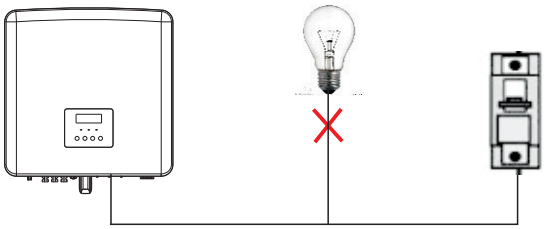

Figure: Wrong connection of load inverter

➢ EPS (Off-Grid) load requirements

Warning!

Ensure that the connected EPS (Off-Grid) load is within the EPS (Off-Grid) rated output power range, otherwise, the inverter will report an "overload" warning.

When "overload" occurs, adjust the load to make sure it is with in the EPS (Off-Grid) rated output power range, and the Inverter will automatically return to normal.

For non-linear loads, ensure that the inrush power is within the EPS (Off-Grid) rated output power range.
When the configuration current is less than the maximum DC input current, the capacity and voltage of lithium and lead acid will decrease linearly.

The following table shows some common loads for your reference.

Note: Please check with the manufacturer for high-power inductive loads.

Content	Power		Common equipment	Instance		
	Start	Rated		Equipment	Start	Rated
Resistive load	X 1	X 1	Incandescent lamp	100W Incandescent lamp	100VA (W)	100VA (W)
Inductive load	X 3~5	X 2	Fan Fridge	150W Fridge	450-750VA (W)	300VA (W)

Please note: TommaTech K Series Hybrid Inverters do not support half wave loads.

➢ Grid and EPS (Off-Grid) connection steps

• Connection requirements

Note: Check the grid voltage and compare the voltage range with the technical data sheet.
Disconnect the circuit board from all power sources to prevent electric shock.

The Grid as well as the EPS (Off-Grid) ports of Trio-Hybrid K Series need to be wired according to the following steps:

Step 1. Prepare a grid cable (five-core wire) and an EPS (Off-Grid) cable (four-core wire), and find the European terminal and waterproof cover in the accessory bag.

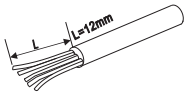

5x 6mm² Grid (Five-Core Cable)

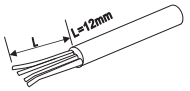

4x 6mm² EPS (Off-grid) (Four-Core Cable)

6 mm² Cable Terminals*10

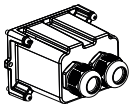

Waterproof cover

5.4 Battery Connection

➢ Connection requirements

Trio-Hybrid K-Series inverters are able to charge and discharge high voltage lithium or lead acid batteries. .
Please note that the maximum voltage of the battery should not exceed 650V and the battery communication should be compatible with the Trio-Hybrid K-Series inverter.

➢ Battery Breaker

Before connecting the battery, a non-polar DC MCB must be installed to ensure safety.
Before maintenance, every inverter needs to be safely disconnected.

Model	Trio-Hybrid -5.0K	Trio-Hybrid -6.0K	Trio-Hybrid -8.0K	Trio-Hybrid -10.0K	Trio-Hybrid -12.0K	Trio-Hybrid -15.0K
Voltage	Nominal voltage of DC breaker should be larger than maximum voltage of battery.					
Current [A]	32A					

➢ Battery connection diagram

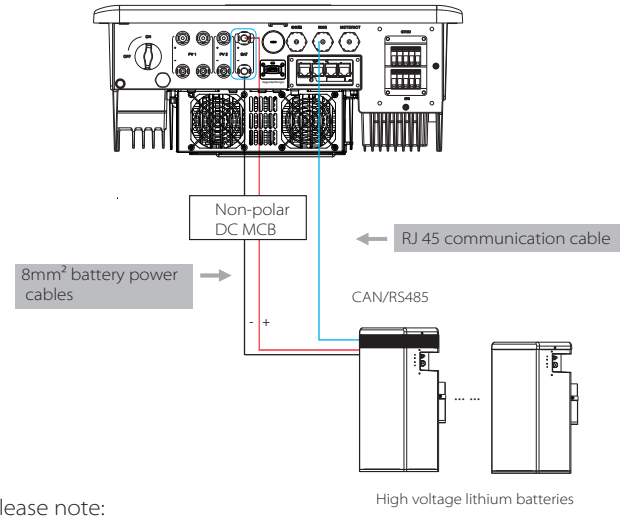

Please note:
To achieve the required battery voltages, you need to connect at least 1x 5.8kWh GeneralPack and 1 - 3x 5.8kWh BoosterPacks or 1x 3.0kWh Storage Manager and 2-4x Hightech Power 3.0kWh LiFePO4 Batteries.

➢ Battery power cable connection steps

The power cable connection steps for Trio-Hybrid K-Series inverters are as outlined below:

Step 1. Prepare a red and a black 8mm² battery power cable and the Battery terminal connectors BAT plug (+) and BAT plug (-) from the accessory bag.

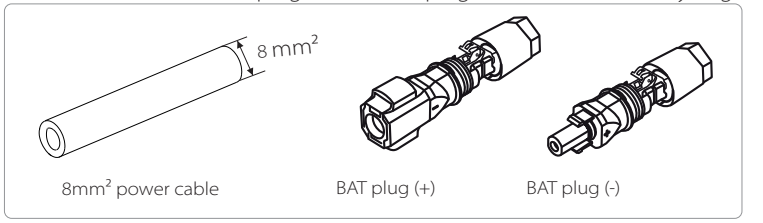

Step 2. Strip the insulation layer 15mm at one end of the power cable.

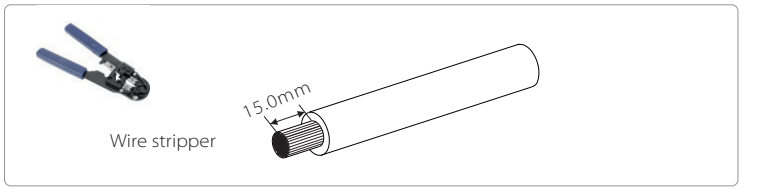

Step 3. Insert the stripped cables into the DC plug (-) and DC Plug (+) respectively.

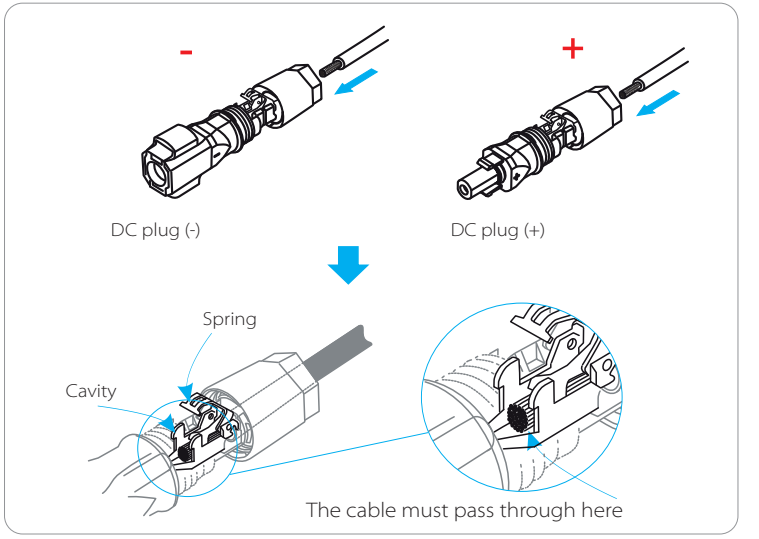

Step 4. Press down the spring by hand until you hear a click sound. Then push the ends together and tighten the screw joints.

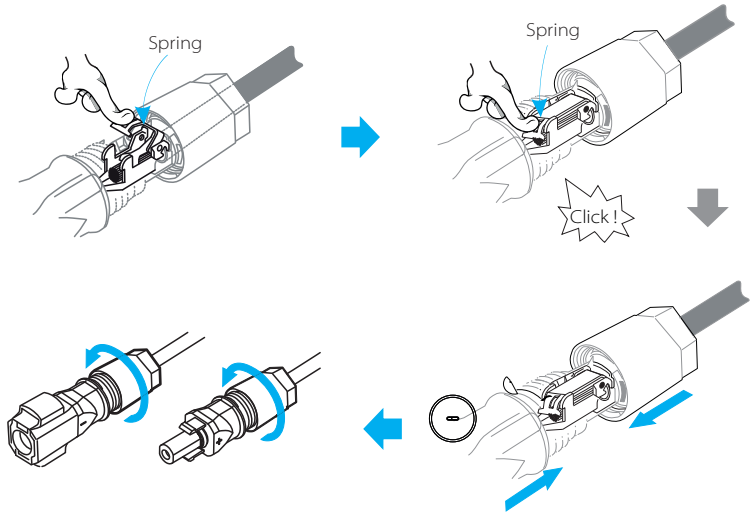

Step 5. Insert the battery power cables into the corresponding BAT (+) and BAT (-) ports of the inverter.

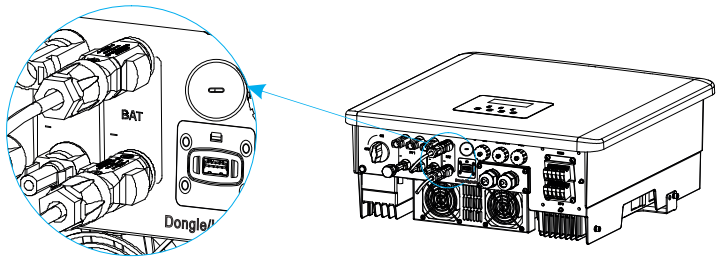

Note: BAT port, not PV port!

Note: The positive and negative wires of the battery must not be reversed!

➢ Battery BMS communication connection

The communication interface between the inverter and the battery uses waterproof connectors with RJ 45.

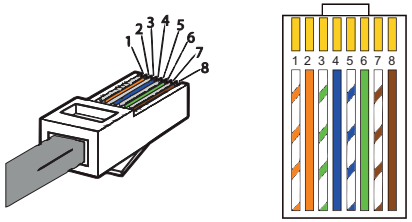

1) White with orange stripes
2) Orange
3) White with green stripes
4) Blue
5) White with blue stripes
6) Green
7) White with brown stripes
8) Brown

1	2	3	4	5	6	7	8
X	X	X	BMS_CANH	BMS_CANL	x	BMS_485A	BMS_485B

Note!
After the BMS communication between the battery and the inverter is established, the battery will start operating.

5.5 Additional Inverter Connections

5.5.1 Introduction to DRM communication (AS4777 regulatory requirements)

DRM requirements:

Mode	Requirement
DRM0	Disconnect device
DRM1	Do not consume power
DRM2	Do not consume more than 50% of rated power
DRM3	Do not consume more than 75% of rated power AND Source reactive power if capable
DRM4	Increase power consumption (subject to constraints from other active DRMs)
DRM5	Do not generate power
DRM6	Do not generate more than 50% of rated power
DRM7	Do not generate more than 75% of rated power AND Sink reactive power if capable
DRM8	Increase power generation (subject to constraints from other active DRMs)

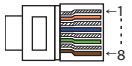

1	2	3	4	5	6	7	8
DRM1/5	DRM2/6	DRM3/7	DRM4/8	+3.3V	DRM0	GND	GND

Note!
Currently only PIN6 (DRM0) and PIN1 (DRM1/5) are functional, other PIN functions are under development.

5.5.2 Smart Meter / CT Communication

Trio-Hybrid K-Series inverter should work with an electric meter or current sensor (CT for short) to monitor household electricity usage. The electricity meter or CT can transmit the relevant electricity data to the inverter or TommaTech-Portal, which is convenient for users to control the inverter at anytime.

Users can choose to use electric meters or CTs according to their needs.

Please note that a Smart Meter/CT brand as recommended by TommaTech must be used.

Note!
The Smart Meter or CT must be connected to the inverter, otherwise the inverter will shut down and give "meter failure" alarm. Smart Meters must be authorized by TommaTech, third party or other companies. Unauthorized Smart Meter may be incompatible with the inverter.

TommaTech will not be responsible for the impact caused by the use of other appliances.

➢ Electric meter connection diagram

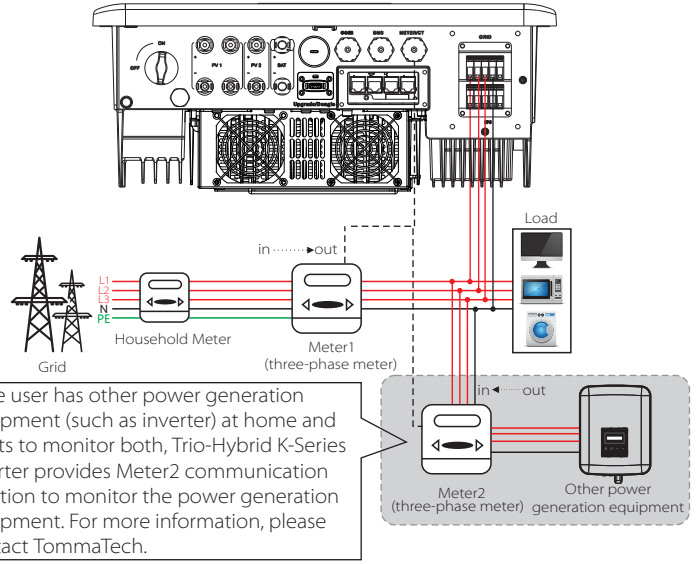

If the user has other power generation equipment (such as inverter) at home and wants to monitor both, Trio-Hybrid K-Series inverter provides Meter2 communication function to monitor the power generation equipment. For more information, please contact TommaTech.

Note: If you want to connect the Smart Meters, please ground the GND terminal of the Meter1.

5.5.3 Parallel Connection

Up to 6x Trio-Hybrid K-Series Inverters can be connected in parallel. In a paralleled solution, one inverter will be chosen as the "Master" inverter which will control all other inverters. Furthermore, the system needs to be equipped with a Trio Parallel or Trio EPS Parallel Box which communicates with the "Master Inverter", while all other "Slave" inverters are connected to the "Master" inverters in parallel via CAN cable.

If users want to use the parallel function, please contact TommaTech for consultation and to purchase Trio Parallel and Trio-EPS Parallel boxes.

Parallel Connection Diagram

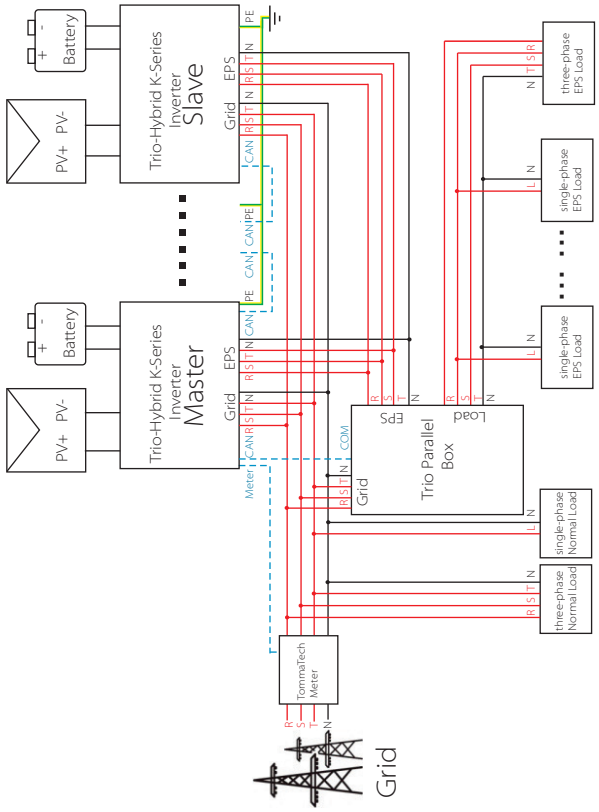

➢ Work modes in parallel solutions

There are three work modes in parallel system, which will help you understand parallel system better, therefore please read it carefully before operating.

Free mode	Only if no inverter is set as a "Master", all inverters are in free mode in the system.
Master mode	if one inverter is set as "Master", this inverter enters Master mode. Master mode can be changed to free mode.
Slave mode	After one inverter is set as "Master", all other inverters will enter "Slave" mode automatically. "Slave" mode can not be changed to other modes by LCD setting.

➢ Communication Wiring and LCD setting

Note: Before operation, please make sure that the inverter meets the following three conditions,
1. The software version of all inverters is the same;
2. The power range of all inverter models is the same;
3. The type and quantity of batteries connected to all inverters are the same;
Otherwise, this function cannot be used.

Note: There are two CAN ports on the inverter. The left CAN port of the inverter set as the "Master must be connected to the COM port of the Trio Parallel Box, while the CAN port on the right is reserved for the first "Slave".

Step1: Connect all inverters with CAT7 network cables between the CAN ports.

– Use standard CAT7 network cables for CAN-CAN connection and CAT5 cable for CAN (left)-COM (Trio-Paralle Box) connection.

– Insert one side of CAT7 cable into the first inverter's CAN (right) port and the other side into the next inverter's left CAN port.

– Insert one side of CAT5 cable into the COM port of Trio Parallel Box, and the other side into the CAN (left) port of the "Master" inverter.

– Insert one side of a CAT5 cable into the Smart Meter, and the other side into the Meter port of the "Master" inverter.

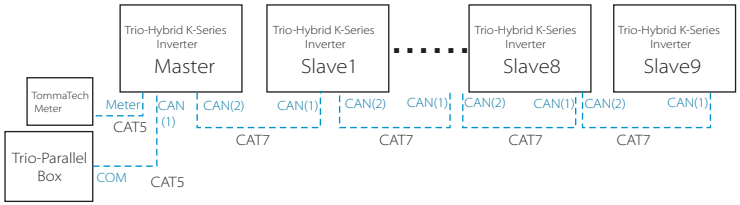

➢ CAN PIN Definition

1	2	3	4	5	6	7	8
485A	485B	VCC	CANH	CANL	GND	SYN1	SYN2

Step 2: Connect the power cable between Trio Parallel Box (Trio EPS Parallel Box) and inverter (R/S/T/N/PE).

If the user purchased the Trio Parallel Box, please refer to the Trio Parallel Box user manual for installation and connection.

If the user purchased the Trio EPS Parallel Box, please refer to the Trio EPS Parallel Box user manual for installation and connection.

Important Warning!

- The hybrid parallel system is extremely complex and a large amount ôf cables needs to be connected. Therefore it is strongly required that **every cable must be connected according to the correct line sequence (R-R, S-S, T-T, N-N)**. Otherwise any small misoperation may cause the system to fail.

For example, the wiring diagram of the Trio Parallel Box is outlined below:

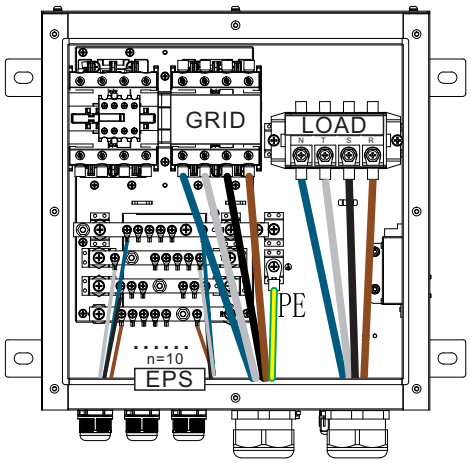

Trio Parallel Box

Step 3: Find the inverter which is connected to the Smart Meter, enter the setting page of the inverter LCD screen, click on the parallel settings, and select "master control". Furthermore, enter the "Resistance Switch" Settings and set it to " ON".
Finally, find the last slave in the parallel system and enter the setting page of the inverter LCD screen and set the "resistance switch" to "ON".

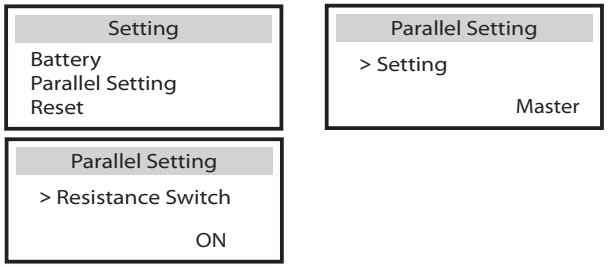

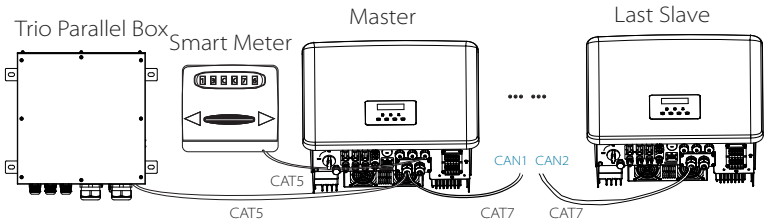

➢ How to uninstall parallel system

If you want to remove one inverter from the parallel solution, please follow the steps as outlined below:
- step1: Disconnect all the network cables on the CAN port.
- step2: Disconnect all power cables (R/S/T/N/PE) connected to Trio Parallel Box or Trio EPS Parallel Box.
- step3: Enter setting page and click parallel setting, and choose "Free".

> **Note!**
> - If a slave inverter is set to "Free" mode but the network cable is not disconnect, this inverter will return to "Slave" Mode automatically.
> - If a slave inverter is disconnected from other inverters but not set to "Free" Mode, this inverter will stop working and maintain "waiting" status.

➢ LCD display

Main display:
Once an inverter enters parallel mode, the "today yield" will be replaced by "Inverter Class". And parallel relevant faults have a higher priority than other faults and will be shown first on the main display.

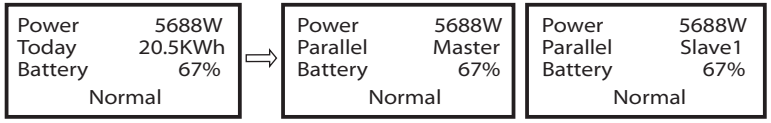

Status display:
User can obtain all the status data from the "Master" inverter. System power and individual slave inverter power can also be obtained from the status display of the "Master" inverter.

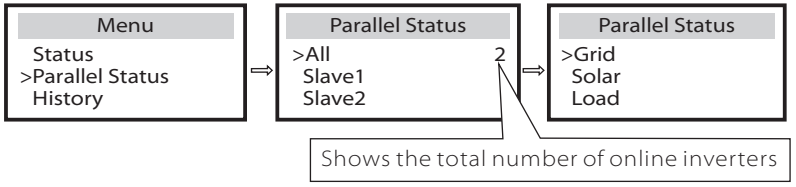

➢ Parallel control functions

The "Master" inverter has an absolute lead in the parallel system to control all slave inverter's energy management and dispatch control. Once the "Master" inverter enters fault mode and stop working, all slave inverters will stop simultaneously. However, the "Master" inverter works independent of all "Slave" inverters and will not be affected by slave inverter's fault.

The overall system will be running according to the "Master" inverter's settings, and most setting parameters of "Slave" inverters will be kept.

Once the "Slave" inverter exits from a parallel configuration and runs as an independent unit, its settings will be re-excuted.

The rest of this section covers several important parallel control functions, while the table on the next page shows which LCD options are controlled by master inverter and which can work independently.

Off Mode setting:
Off Mode can only be set by the "Master" inverter (long press ESC button on LCD) .

Safety settings:
System safety protection is determined by the "Master" inverter's safety. The "Slave" inverter protection mechanism will only be triggered by the "Master" inverter's instructions.

Self-use Mode:
If the system is running in Self-Use Mode, please note that the Feed-in Power Limit set by the "Master" inverter counts for the overall system and the corresponding settings of the "Slave" inverters is invalid.

Power Factor settings:
All settings of the "Master" inverter regarding the power factor account for the overall system and the corresponding settings of the "Slave" inverters are invalid.

Remote control settings:
The remote instructions received by the "Master" inverter will be interpreted as the instructions for the overall system.

5.5.5 Communication Connection Steps

Step 1. Prepare a communication cable, and find the communication adapter in the accessory bag.

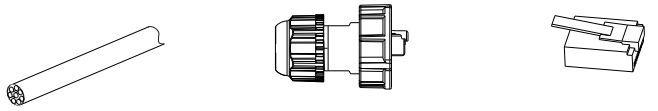

Communication cable Waterproof connector with RJ 45 RJ 45 terminal

Step 2 . To connect the inverter CAN/DRM/SHUT port communication line connection, you need to remove the inverter cover plate as illustrated below:

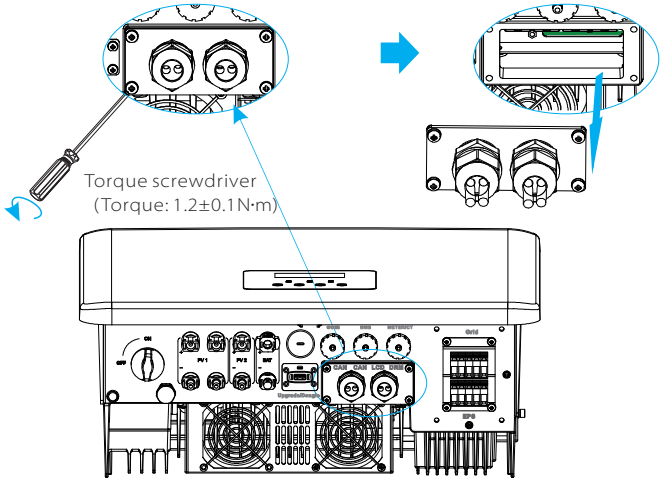

Step 3. Insert the communication cable through the communication adapter, and peel off 15mm outer insulation layer.

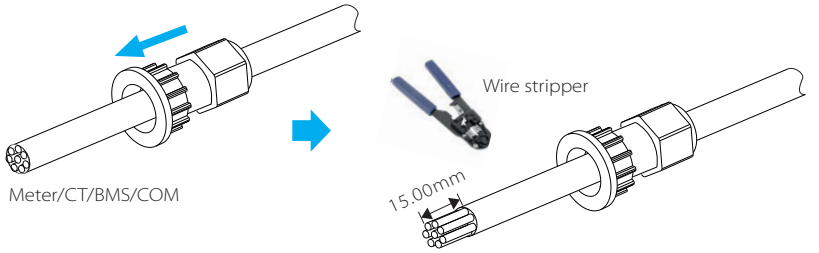

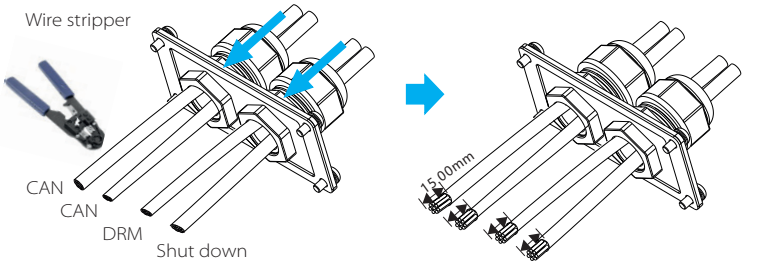

Step 4. Insert the prepared communication cables into the RJ45 terminals and use network cable crimping pliers to press them tightly.

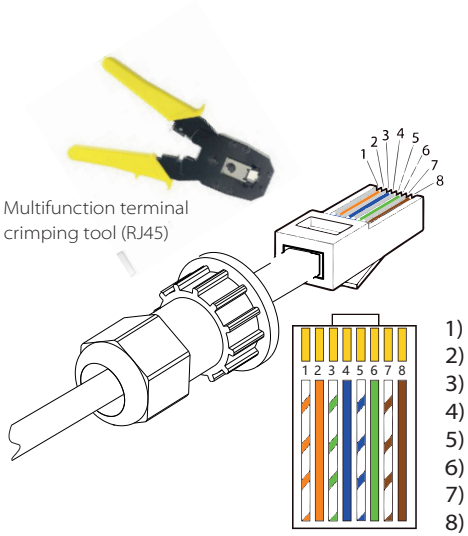

1) White with orange stripes
2) Orange
3) White with green stripes
4) Blue
5) White with blue stripes
6) Green
7) White with brown stripes
8) Brown

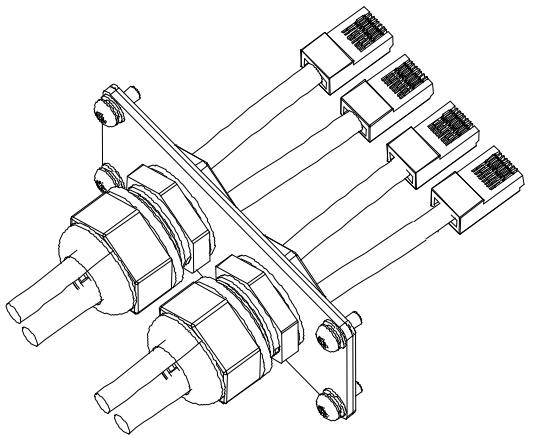

➢ BMS communication cable

The BMS pins are defined as follows:

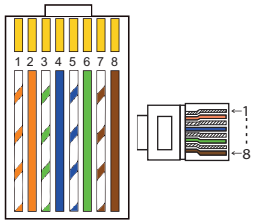

1	2	3	4	5	6	7	8
X	X	X	BMS_CANH	BMS_CANL	x	BMS_485A	BMS_485B

Note!
The communication port on the lithium battery must be consistent with the pins 4, 5, 7, and 8 as illustrated above.;

➢ DRM communication cable

The DRM pins are defined as follows:

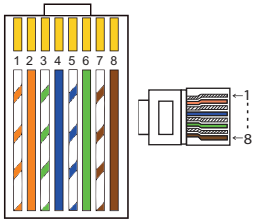

1	2	3	4	5	6	7	8
DRM1/5	DRM2/6	DRM3/7	DRM4/8	+3.3V	DRM0	GND	GND

Note!
Currently, only PIN 6 (DRM0) and PIN I (DRM1 /5) are available.
Further PIN functions are under development.

➢ **METER/CT communication cable**

METER/CT pins are defined as follows:

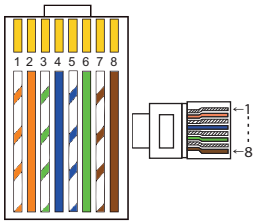

1	2	3	4	5	6	7	8
CT R-1	CT S-1	CT T-1	485A	485B	CT T-2	CT S-2	CT R-2

Note!
Either Smart Meter or CT connections can be selected. The Smart Meter is connected to the Pins 4 and 5; CT-R cable to Pins 1 and 8; CT-S cable to Pins 2 and 7; CT-T cable is connected to Pins 3 and 6.

1) Users can customize the length of the CT communication cable. The accessory package provides 1*RJ45 and 1*waterproof connector with RJ45 terminals.
After preparing the CT cable, connect the A terminal to the "CT/METER" port of the inverter and tighten the waterproof screw; connect the B terminal to the RJ45 coupler as illustrated in the picture on the next page.

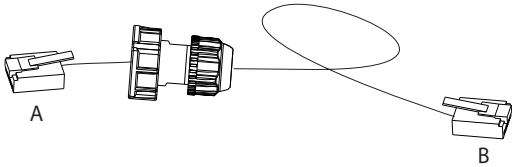

2) One side of the finished cable, Waterproof connector with RJ45 is inserted into the inverter, and one side of the RJ45 terminal is inserted into the CT connection.

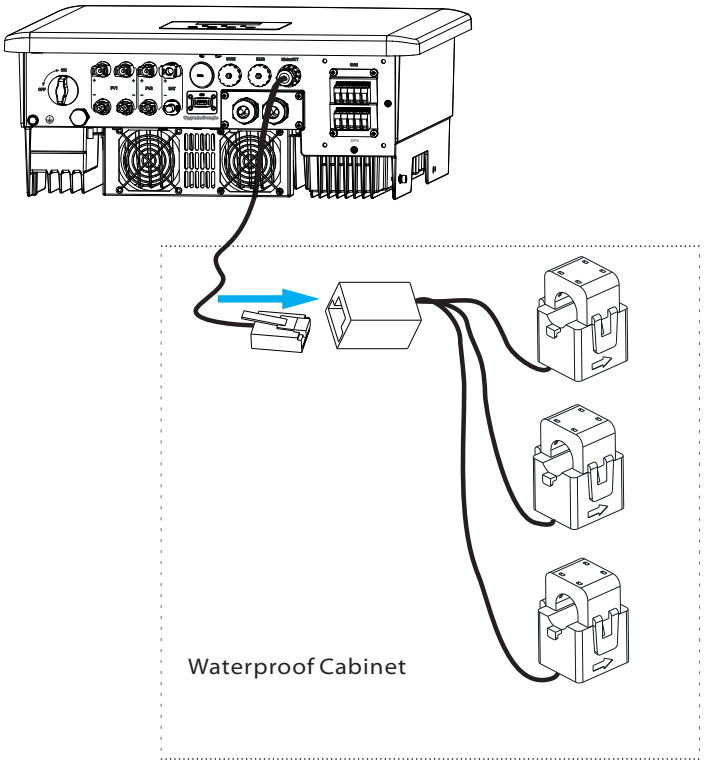

Note!
Please pay attention to water resistance. All parts of the CTs must be installed in a waterproof cabinet.

Step 5. Connect the DRM / CAN / OFF communication cables, and insert the cables into the corresponding port.

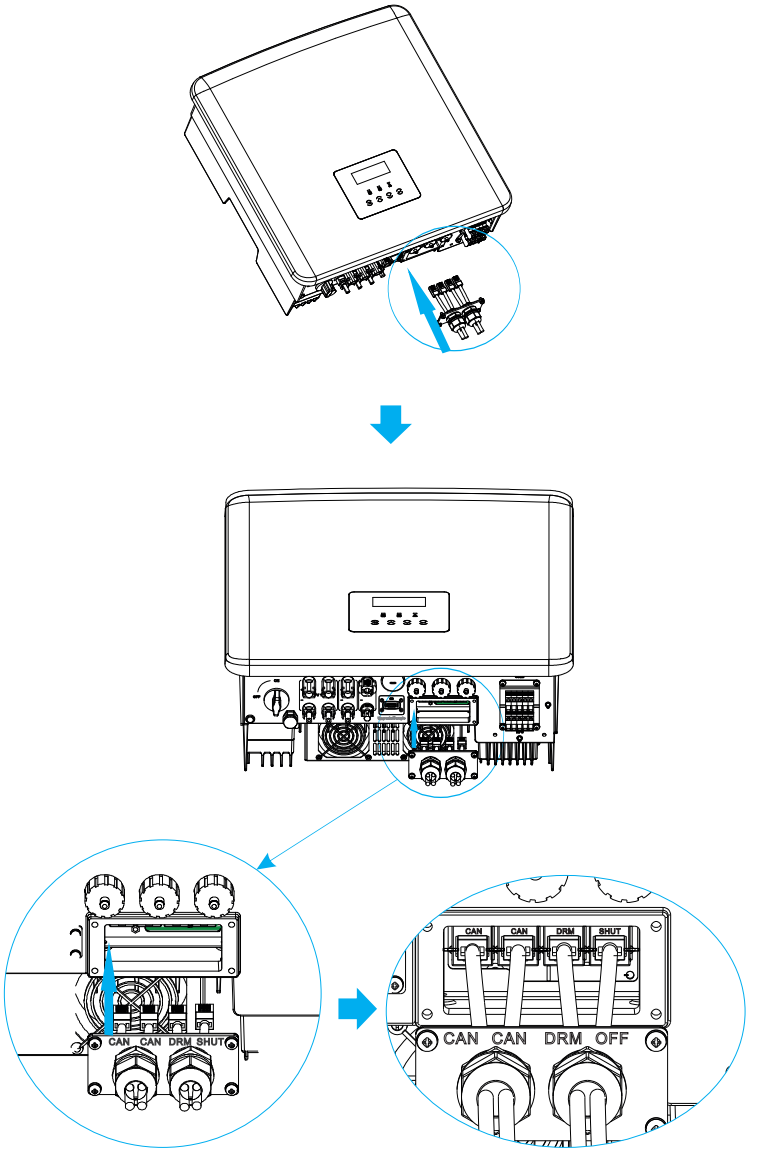

Step 6. Mount the cover plate and tighten the fastening head.

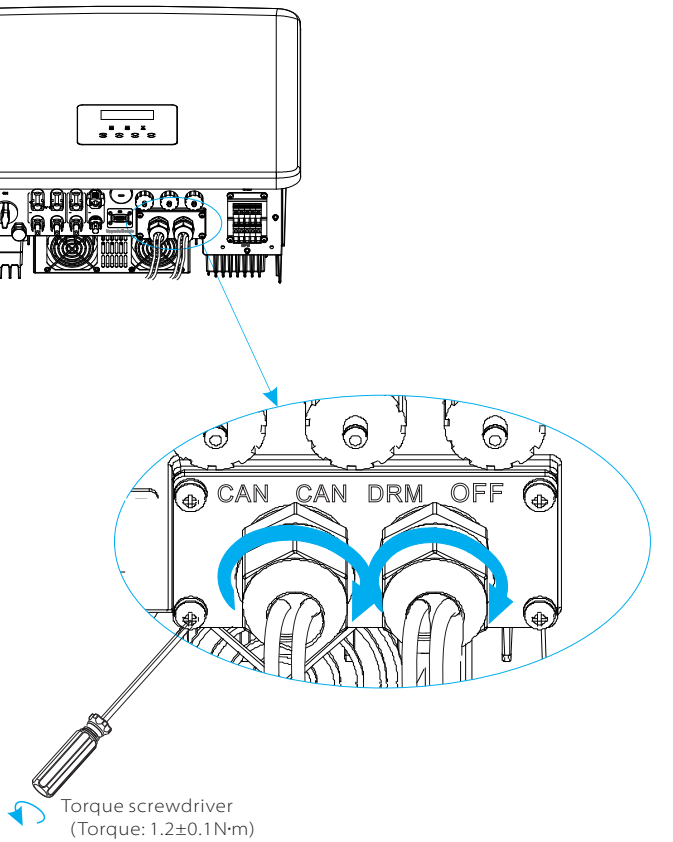

Step 7: Finally, find the COM, BMS, Meter, CT, CAN, DRM, OFF ports on the inverter and connect the corresponding communication cables.

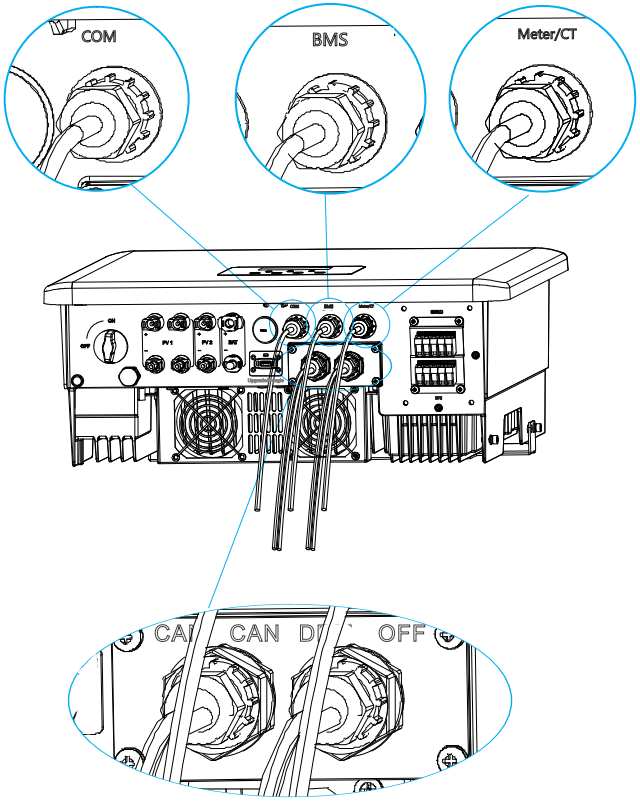

5.6 Grounding Connection (Mandatory)

The user must make two ground connections to prevent electric shocks: shell grounding and equipotential grounding.

> **Note!**
> If the solar panels are not grounded, the inverter will turn on a red light and report ISO Fault, since the inverter complies with IEC 62109-2 clause 13.9 for earth fault alarm monitoring.

Refer to the following steps about grounding Trio-Hybrid K-Series inverters.

➢ Ground connection steps

Step 1. Prepare a 4mm² one-core cable, and find the ground terminal in the accessories.

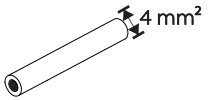

One-core cable (4 mm²)

Ground terminal

Hexagon socket screws

Step 2. Strip the grounding cable for a length as illustrated below, insert the striped cable into the ring terminal, and then clamp it.

Wire stripper

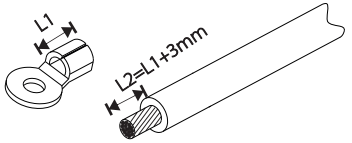

5.7 Monitoring Connection (Accessories)

The inverter provides a DONGLE port, which can transmit data of the inverter to the monitoring website via TommaTech Wi-Fi and LAN Dongle. (If requested, please purchase the monitoring devices from your closest TommaTech partner.

➢ DONGLE connection diagram

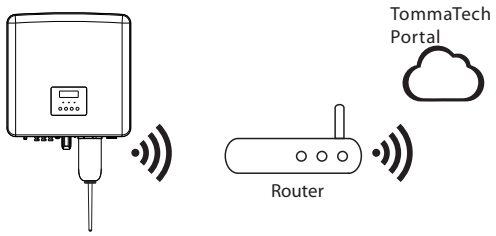

➢ Wireless monitoring accessories connection steps

Refer to the following steps to install a Wi-Fi or LAN Dongle to a Trio Hybrid K series inverter.

Step 1. First find the DONGLE port on the inverter.

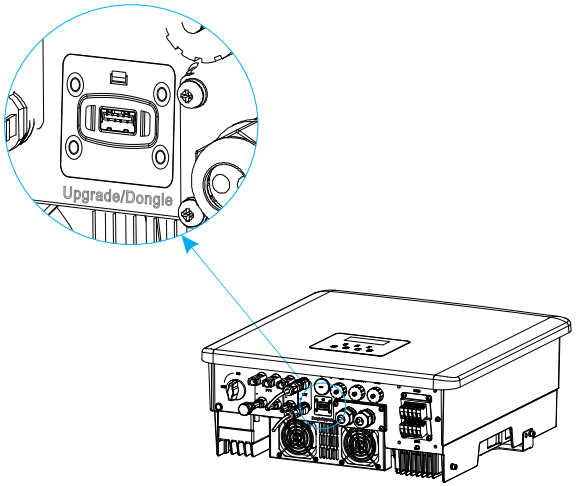

Step 2. Plug the TommaTech Wi-Fi or LAN Dongle into the DONGLE port.

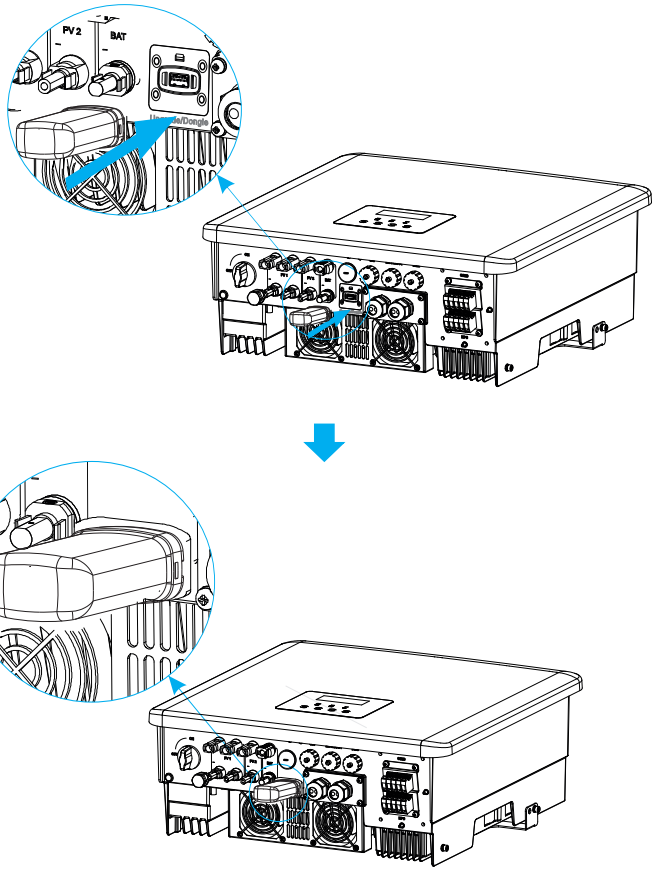

Please check the TommaTech Wi-Fi/LAN Dongle user manual for further connection steps.

Normal: If the inverter is working normally, the green light is always on. At the same time, the power is fed back to the grid, and the LCD screen displays the output power.

If it is the first time to boot, please follow the instructions in this manual to enter the setting interface.

Warning!
The input terminal of the inverter can only be opened after all the installation work of the inverter has been completed. All electrical connections must be performed by professionals in accordance with local regulations.

Note!
If it is the first time to operate the inverter, the system will automatically display the setup guide. Please follow the setup guide to complete the basic inverter settings.

6 Firmware Upgrade

➢ Upgrade notes

Please read the following precautions before upgrading.

Warning!
- If the DSP and ARM firmware need to be upgraded, please note that ARM firmware must be upgraded first, then DSP firmware!
- Please make sure that the category format is correct. Do not modify the firmware file names. Otherwise, the inverter may not work!

Warning!
- Please ensure that the PV input voltage is greater than 180V (upgrade on sunny days) and that the battery SOC is greater than 20% or the battery input voltage is greater than 180V. Otherwise, it may cause serious failure during the upgrade process!

Caution!
- If the ARM firmware upgrade fails or stops, please do not unplug the USB flash drive. Restart the inverter and repeat the upgrade steps.

Caution!
- If the DSP firmware upgrade fails or stops, please check whether the power is off. If it is normal, plug in the USB flash drive again and repeat the upgrade.

➢ Upgrade preparation

1) Please check the inverter version and prepare a USB flash drive (USB 2.0/3.0) as well as al computer before upgrading.

Caution!
- Please make sure that the size of the USB flash drive is smaller than 32GB, and the format is FAT 16 or FAT 32.

2) Please contact our service support through support@tommatech.de to obtain the firmware, and store the firmware in a USB flash drive according to the following path.

Update:
For ARM file: "update \ARM\618.00406.00_HYB_3P_ARM_V1.01.0710_usb";
For DSP file: "update\DSP\618.00405.00_HYB_3P_DSP_V1.01.0710_usb";

➢ Upgrade steps

Step 1. Please save the "Upgrade" firmware in your USB flash drive, and press the "Enter" button on the inverter screen for 5 seconds to enter the OFF Mode.

Step 2. Find the "Upgrade" port of the inverter, unplug the monitoring module (TommaTech Wi-Fi/LAN Dongle), and insert the USB flash drive.

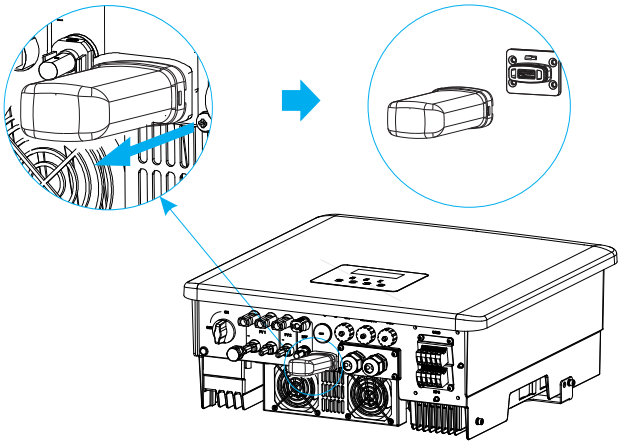

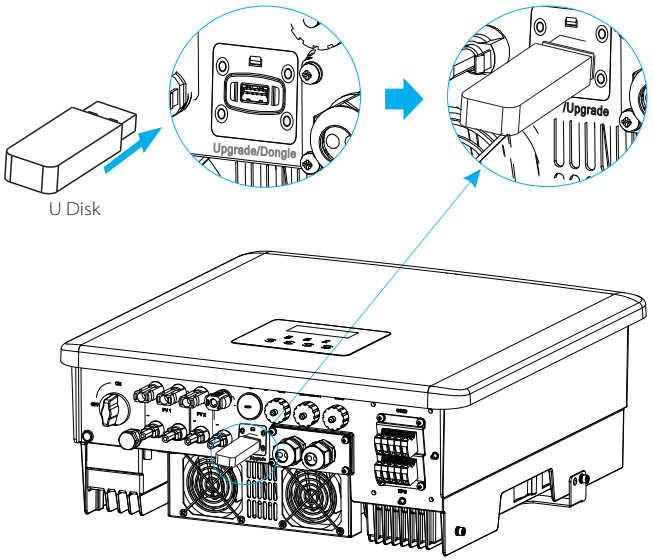

Step 3. On the LCD screen, enter the upgrade interface "update", as shown below: Please to select ARM, then press "Down" to set "OK". Press the enter key to "Enter" the software version interface.

== Upgrade Selection ==	=== Upgrade(ARM) ===
>ARM	Cancel
DSP	>OK
(a)	(b)

Step 4. Please confirm the new firmware version again and select the firmware to upgrade. The upgrade takes about 20 seconds.
When it is completed, the LCD screen returns to the "Update" page.

===Update(ARM) ===	====Update(ARM) ====	==== Update ====
>618.00406.00_HYB_3P_ARM_V1.13_1220.usb	Upgrading---------25%	>ARM
		DSP
(c)	(d)	(e)

Step 5. For DSP: Please wait for 10 seconds. When the "Update" page shows as below, press "Down" to select "DSP" and then press "Enter".. Please confirm the firmware version again and press "Enter" to upgrade. The upgrade takes about 2 minutes.

```
==== Update ====
 ARM
>DSP
```

(f)

```
===Update(DSP) ===
>618.00405.00_HYB_3P_
DSP_V1.14_1215.usb
```

(g)

```
====Update(DSP) ===
 connect
```

(h)

```
===Update(DSP) ===
 DSP Erasing---------
```

(i)

```
====Update(DSP) ===
 Upgrading---------25%
```

(j)

Step 6. After the upgrade is completed, the LCD screen displays "Upgrade Successful".

```
=== Upgrade(DSP) ===
 Upgrade Successful
```

(k)

Step 7. Plug off the USB flash drive, press "ESC" to return to the main interface, and press the enter key for more than 5 seconds to exit Off Mode.

Caution!

- Please strictly follow each step from step 1-6.
- Please confirm the ARM/DSP firmware version on the USB flash drive.

Tip: If the display screen is stuck on "Trio-Hybrid K-Series" after the upgrade, please turn off the photovoltaic power supply and restart the inverter to return to Normal Mode. If not, please contact support@tommatech.de for help.

7 Setting

7.1 Control Panel

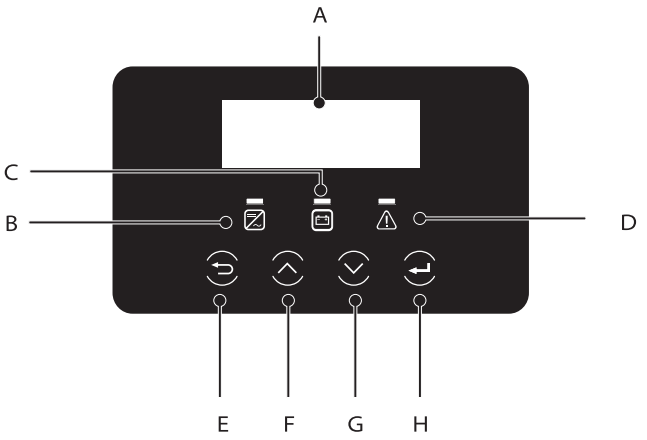

Object	Name	Description
A	LCD Screen	Displays inverter information.
B	LED Indicator lights	Blue light: The inverter is in Normal or EPS (Off-Grid) Mode. Blue flashing: The inverter is in the waiting or checking state or the system switch is off. Off: The inverter is in a fault state.
C		Green: The battery communication is normal but the battery MCB might be disconnected. Green flashing: The battery communication is normal and in an idle state. Off: The battery does not communicate with the inverter.
D		Red light on: The inverter is in a fault state. Off: The inverter has no error.
E	Key Function	ESC button: Return from the current interface or function.
F		Up button: Move the cursor to the upper part or increase the value.
G		Down button: Move the cursor down or decrease the value.
H		Enter button: Confirm selection.

7.2 Screen Menu Structure

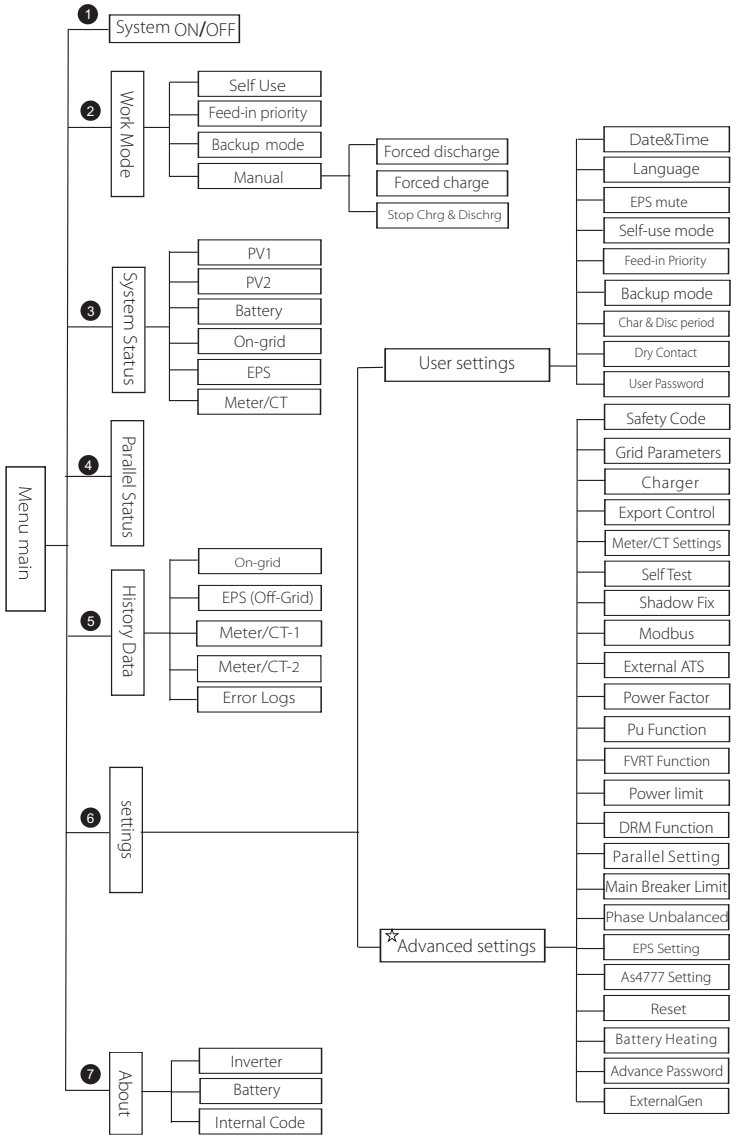

Note:"☆"This part of the content cannot be set by the end user. Please contact the installer or TommaTech if necessary.

7.3 LCD Screen

The main interface is also the default interface, to which the inverter will automatically return if the system started up successfully or is not operated for a period of time.

The information of the interface shows the followings: "Power" shows the current output power; "Today" lines out the power generated within the day. "Battery" displays the remaining SOC.

Power	0W
Today	0.0KWh
Battery	80%
Normal	

➢ Menu Interface

You can change settings or gather further information via the "Menu Interface".
- When the LCD displays the main interface, click "OK" to enter the "Menu" interface.
- You can navigate the "Menu" Interface using the "Up" and "Down" keys and press "Enter" to confirm.

Menu
>System ON/OFF
Work Mode
System Status

➢ Main Menu

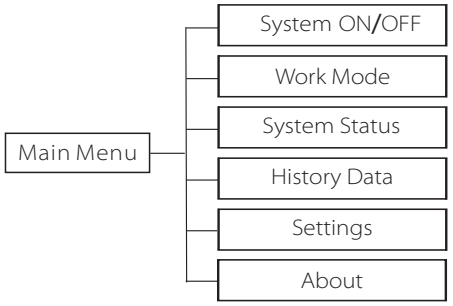

➢ System ON/OFF

"ON" means the inverter is in working state, which is also in the default state.

"OFF" means that the inverter stops running and only the LCD screen is on.

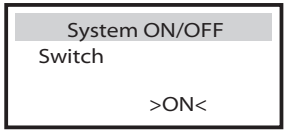

➢ Work Mode

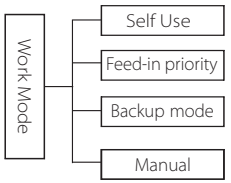

As outlined in chapter 2.3,, there are 4 working modes to choose from.

Name	Description
Self Use	The self-use mode is suitable for areas with low feed-in subsidies and high electricity prices. ① Sufficient Solar Power Solar will power the loads at first priority while excess solar energy will be stored in the batteries. If the battery is fully charged, the excess energy will be sold to national grid. Please note: The output to the grid can be limited through "zero feed-in" or "feed-in" options. **(PV > Load, PV → Load → Battery → Grid)** ② Insufficient Solar Power Depending on the settings, there are two options: Solar will power the loads at first priority. The required balance energy will be taken from public power supply. The batteries will not be used. **(PV < Load, PV + Grid → Load)** Solar will power the loads at first priority. The required balance energy will be taken from the batteries. However, if the power from the batteries not enough, the remaining power will be taken from the grid. **(PV < Load, PV + Battery + Grid → Load)** ③ No Solar Power Depending on the preferences, there are two options: National grid supplies the loads at first priority and can also charge the battery; **(PV = 0, Grid → Load + Battery)** The battery will power the home loads at first priority. If the battery power is not enough, the remaining power will be taken from the grid. The inverter will enter into the standby state. **(PV = 0, Battery + Grid → Load)** Battery min SOC can be set to: 10%-100%; Charge battery to min SOC can be set to:10%-100%.
Feed-in priority	The Feed-in Priority mode is suitable for areas with high feed-in subsidies, and can be controlled with feed-in power limitations. ① Sufficient Solar Power Depending on the preferences, there are two options: Solar will power the loads at first priority while excess solar energy will be stored in the batteries up to the chosen limit. After that, the excess energy will be sold to national grid. However, if the allowed feed-in electricity is limited, the inverter will charge the batteries further after that limit is reached. **(PV > Load, PV → Load → Battery → Grid → Battery)**

Feed-in priority	Solar will power the loads at first priority while excess solar energy will be sold to national grid. **(PV > Load, PV → Load → Grid)** ② Insufficient Solar Power Depending on the preferences, there are two options: Solar will power the loads at first priority. The required balance power will be taken from national grid. The battery will not discharge. **(PV < Load, PV + Grid → Load)** Solar will power the loads at first priority. The required balance energy will be taken from the batteries. However, if the power from the batteries not enough, the remaining power will be taken from the grid. **(PV < Load, PV + Battery + Grid → Load)** ③ No Solar Power Depending on the preferences, there are two options: National grid supplies the loads at first priority and can also charge the battery; **(PV=0, Grid → Load + Battery)** The battery will power the home loads at first priority. If the battery power is not enough, the remaining power will be taken from the grid. The inverter will enter into the standby state. **(PV=0, Battery + Grid → Load)** Battery min SOC can be set to: 10%-100%; Charge battery to min SOC can be set to:10%-100%.
Backup Mode	The Backup Mode is suitable for areas with frequent power outages. Basically, it follows the same working logic as the Self Use Mode. However, this mode will maintain the battery capacity at a relatively high level according to the users' settings to ensure that the emergency loads can be used when the grid is off. Battery min SOC can be set to:30%-100%. Charge battery to min SOC can be set to:30%-100%.
EPS (Off-Grid)	In case of a power cut, the system will power EPS loads from PV and battery. However, please note that batteries must be installed to choose this mode. ① Sufficient Solar Power Solar will power the loads at first priority while excess solar energy will be stored in the batteries. **(PV > Load, PV → Load → Battery)** ② Insufficient Solar Power The required balance energy will be taken from the batteries. **(PV < Load, PV → Load → Battery)** ③ No Solar Power The battery will power the emergency loads until the battery reaches the min SOC. After that, the inverter will enter into the idle mode. **(PV = 0, Battery → Load)** EPS (Off-Grid) SOC-min condition is adjustable within the range of 10%-25%.

Note: in the case of grid connection, all working modes work normally when the battery SOC >5%. When the battery charge rate is below 5%, the PV or Grid will first charge the battery up to an SOC of 11%, and then return to the chosen working mode.

- Furthermore, there are three manual modes: forced charge, forced discharge as well as stop charging and discharging.

Work Mode
>Manual
Forced Charge

Work Mode
>Manual
Forced Discharge

Work Mode
>Manual
Stop Chrg&Dischrg

➢ System Status

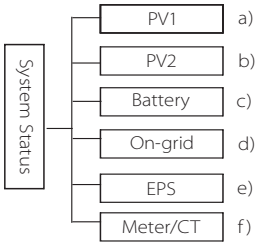

In the "System Status" section, the following information can be obtained: PV1/PV2/Battery/On-grid (energy fed into or bought from the grid), EPS (Off-grid) and Meter/CT.
Press "Up" and "Down" to navigate and "Enter" to confirm the selection. Press "ESC" to return to the menu.

a/b) PV1, PV2
Here you can see the voltage, current and power of the connected solar panel arrays;

PV1	
>U	0.0V
I	0.0A
P	0 W

PV2	
>U	0.0V
I	0.0A
P	0 W

c) Battery
This status shows the battery condition of the system, including battery voltage and battery current, battery power, battery capacity, battery temperature and BMS connection whereby "+" indicates charging and "-" discharging.

Battery	
U	400.0V
I	-1.0A
P	-400W
SoC	0%
Cell Temp	20℃
BMS Connected	

Battery	
U	400.0V
I	-1.0A
P	-400W
NTC Temp	

d) On-grid
Here you can see the voltage, current, frequency, and power of the grid.

On-grid A	
Ua	0.0V
Ia	0.0A
PaOut	0 W

On-grid B	
Ub	0.0V
Ib	0.0A
PbOut	0 W

On-grid C	
Uc	0.0V
Ic	0.0A
PcOut	0 W

Grid Frenquency	
Fa	0.00Hz
Fb	0.00Hz
Fc	0.00Hz

e) EPS
Here you can see the output voltage, current, frequency and power of the inverter in EPS Mode,

EPS_Spower	
PaS	0VA
PbS	0VA
PcS	0VA

EPS A	
Ua	0.0V
Ia	0.0A
PaActive	0W

Frequency	
Freq	0.00Hz

EPS B	
Ub	0.0V
Ib	0.0A
PbActive	0W

EPS C	
Uc	0.0V
Ic	0.0A
PcActive	0W

f) Meter/CT
Here you can see all data regarding the connected Smart Meter or CT.

Meter/CT	
>Meter/CT1-A	-6w
Meter/CT1-B	-6w
Meter/CT1-C	-6w
> Meter/CT2-A	-6w
Meter/CT2-B	-6w
Meter/CT2-C	-6w

➢ **Parallel Status**

This section shows the parallel connection status.

Parallel Status	
All	3
Slave 1	O
Slave 2	X
Slave 3	O
Slave 4	X
Slave 5	X
Slave 6	X
Slave 7	X
Slave 8	X
Slave 9	X

➢ **History Data**

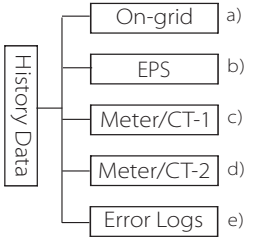

The history data contains five groups of information: on-grid data, EPS power mode, information regarding the Smart Meter /CT and Error Logs.

Use the "Up" and "Down" buttons to navigate and press"Enter" to confirm the selection. Press "ESC" to return to the menu.

a) On-grid
Here you can find today's as well as the total energy output and input.

On-grid	
Output Today	0.0 KWh
Output Total	0.0 KWh
Input Today	0.0 KWh
Input Today	0.0 KWh

b) EPS
This sections shows today`s as well as the total EPS output.

EPS	
Today:	0.0 KWh

EPS	
Total:	0.0 KWh

c) Meter /CT-1
Here you can find today's as well as the total electricity consumed and sold to national grid.

```
Meter CT-1
>FeedInToday
 FeedInTotal
 ConsumeToday
 ConsumeTotal
```

d) Meter /CT-2
Here you can see today's and the total output of the inverter.

```
Meter CT-2
>Output Today
 OutputTotal
```

e) Error Logs
Here you can see the six most recent error messages.

```
Error logs
>No error
```

➢ **User Settings**

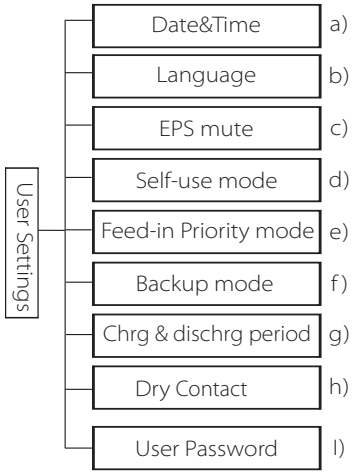

Here you can set the inverter time, language, working mode , Dry Contact, charging and discharging time period and user password.

```
User Setting
 Date & Time
> Language
 EPS mute
```

a) Date time
This interface is for users to set the system date and time.

```
Date time
>2021 - 11 - 10
 10 : 05
```

b) Language
TommaTech inverters provide multiple languages for customers to choose.

```
Language
> Select:
    English
```

c) EPS Mute
This section enables you to mute the buzzer if the inverter is running in EPS Mode. If selected "Yes", the buzzer will sound once every 4s when the battery is fully charged. The more the battery will be discharged, the higher the buzzer will sound, to remind users to reduce energy consumption.

```
EPS Mute
> Mute:
  Yes        No
```

d) Self-Use Mode
In this section, you can set the power reserve percentage of the minimum battery state, whether the power can be taken from national grid to charge the battery as well as the charging power of the battery.
For example: setting the reserved minimum SOC of the battery capacity to "10%" means that the battery will only be discharged down to 10%;
When "Charge from grid" is set to "Enable", the utility power is allowed to charge the battery; when set to "Disable", the utility power is not allowed to charge the battery;
If "Charge battery to" is set to 10%, public power supply is only allowed to charge the battery up to 10%.

Self-use Mode
> Min SOC: 10%

Self-use Mode
> Charge from grid Enable

Self-use Mode
> Charge battery to 10%

e) Feed-in Priority Mode
In this section, you can choose the minimum battery reserve SOC whether the national grid is allowed to charge the battery, and set the national grid charging limit.
For example: setting the "Min SOC" of the battery to "10%" means that the battery is not discharged below 10%;

Setting " Charge battery to" is set to 50% allows public power supply charge the battery up to 50%.

Feed-in Priority Mode
> Min SOC: 10%

Feed-in Priorty Mode
> Charge battery to 50%

f) Backup Mode
In this section, you can choose the minimum battery reserve SOC whether the national grid is allowed to charge the battery, and set the national grid charging limit.
For example: setting the "Min SOC" of the battery to "30%" means that the battery is not discharged below 300%;

Charge battery to is set to 50%, indicating that the mains is allowed to charge the battery at 50%.

Backup mode
> Min SOC: 30%

Backup mode
> Charge battery to 50%

g) Charge and discharge time
Here you can set the charge and discharge time period.
If two charging and discharging periods are needed, turn on the charging and discharging period 2.

Char&Disc Period
> Charge Start Time 00:00

Char&Disc Period
> Charge End Time 00:00

Char&Disc Period
> Allowed Disc Period Start Time 00:00

Char&Disc Period
> Allowed Disc Period End Time 23:59

Char&Disc Period
> Char&Disc Period2

Char&Disc Period2
> Function Control Enable

Char&Disc Period2
> Charge Start Time 00:00

Char&Disc Period2
> Charge End Time 00:00

Char&Disc Period2
> Allowed Disc Period Start Time 00:00

Char&Disc Period2
> Allowed Disc Period End Time 00:00

h) Dry Contact
If the inverter is controlled by external devices or supposed to control them, you can choose the corresponding settings in this section. For the correct settings, please refer to the user manual of the compatible external device.
If the user uses the inverter dry contacts to control external devices (such as heat pumps) through the Heatpump Controller please refer to the Heatpump Controller quick installation manual to set the parameters here.

Dry Contact
> Mode Select Generator

Dry Contact
> Mode Select Load Management

Load Management > Mode Select Disable	Load Management > Mode Select Manual
Load Management Switch ON OFF	Load Management > Mode Select SmartSave
Load Management Thresholds on Feedin power 3000W	Load Management Thresholds off Consumption 500W
Load Management Thresholds off Battery SoC 40%	Load Management Minimum duration per on-signal 5 M
Load Management Minimum duration per day 900 M	Load Management > Schedule Enable Disable
Load Management Work Period 1 Start time 00: 00	Load Management Work Period 1 End time 00:00
Load Management Work Period 2 Start time 00:00	Load Management Work Period 2 End time 00:00

l) User Password

The default password is "0000". However, you can choose a new password by using the "Up" and "Down" keys to increase or decrease the numbers. Press "Enter" to confirm a number and jump to the next digit. When all digits have been entered and confirmed, press "OK" to set the new password successfully.

User Password
>
0 0 0 0

➢ Advance Settings

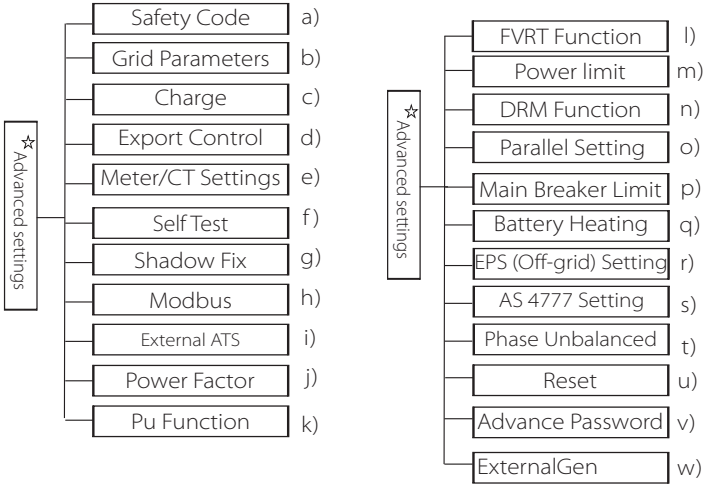

All advanced settings regarding battery, grid, EPS (Off-Grid), etc, can be chosen in this section.
"Advanced Settings" are used for higher level customization to optimize grid, usage and battery parameters. Each part has lower level parts.
Please contact your installer or factory and enter the installer password.

Advanced
Safety Code
> Grid Parameters

a) Safety Code

Users can set safety standards according to different countries.

Safety Code
Country:
VDE0126

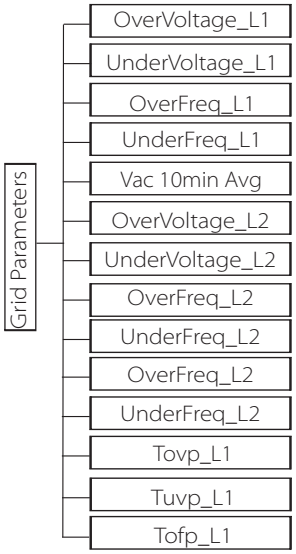

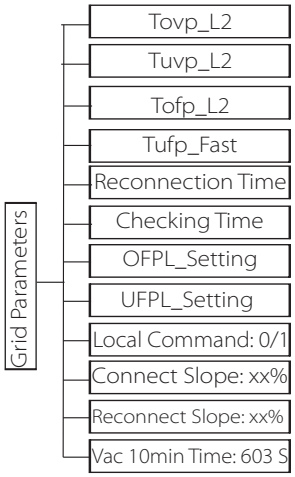

OFPL_Setting OFPL_Curve Symmetric	OFPL_Setting OFPL_Curve Asymmetry	OFPL_Setting OFPL_RemovePoint(Aus.) 50.10Hz
OFPL_Setting OFPL_OverFreqfhyste(Aus.) 50.15Hz	OFPL_Setting OFPL_StartPoint 50.25Hz	OFPL_Setting OFPL_DropRate 5%
OFPL_Setting OFPL_DelayTime 0.0S	OFPL_Setting W(Gra) 19.00%	OFPL_Setting Tstop 20S
OFPL_Setting fstop-disch 50.75Hz	OFPL_Setting fP min 52.00Hz	UFPL_Setting UFPL_RemovePoint(Aus.) 49.90Hz
UFPL_Setting UFPL_UnderFreqfhyste(Aus.) 49.85Hz	UFPL_Setting UFPL_StartPoint 49.75Hz	UFPL_Setting UFPL_DropRate 2%
UFPL_Setting UFPL_DelayTime 0.0S	OFPL_Setting fstop-ch 49.00Hz	OFPL_Setting fP max 48.00Hz

b) Grid Parameters

Here you can set the lower and upper limits of the grid voltage and frequency. The default value is the specified value under the chosen safety regulations, which can not be changed.

The content will be displayed according to the requirements of local laws and regulations, which are constantly updating. Consequently, please stick to the contents displayed on the inverter screen.

Grid Parameters >OverVoltage_L1 265.0V	Grid Parameters >UnderVoltage_L1 180.0V	Grid Parameters >OverFreq_L1 52.00Hz
Grid Parameters >UnderFreq_L1 47.00Hz	Grid Parameters >Vac 10min Avg 258.0V	Grid Parameters >OverVoltage_L2 275.0V
Grid Parameters >UnderVoltage_L2 70.0V	Grid Parameters >OverFreq_L2 52.00Hz	Grid Parameters >UnderFreq_L2 47.00Hz
Grid Parameters >Tovp_L1 1000ms	Grid Parameters >Tuvp_L1 10000ms	Grid Parameters >Tofp_L1 100ms
Grid Parameters >Tufp_L1 1000ms	Grid Parameters >Tovp_L2 100ms	Grid Parameters >Tuvp_L2 1000ms
Grid Parameters >Tofp_L2 100ms	Grid Parameters >Tufp_L2 1000ms	Grid Parameters >Reconnection Time 60s
Grid Parameters >Checking Time 60s		

c) Charger
In this section, you can set the charge & discharge parameters. Please make sure to choose the right settings according to the installed lead acid or lithium ion batteries.

Charger Charge Max Current 30 A	Charger Discharge Max Current 30 A

d) Export Control
This feature allows the inverter to control the amount of electricity injected into the grid.
The chosen value must be less than AC capacity of the inverter. If you don't want to supply power to the grid, set it to 0W.

```
Export Control
User value:
                0W
```

e) Meter/CT Settings
CT is the default setting but can be changed to Smart Meter after installation. If CT is selected, only "Meter 2 Addr" will ne available.

```
CT/Meter Setting
> Select
  Meter        CT
```

```
CT/Meter Setting
> Select
  Disable      Enable
```

```
CT/Meter Setting
> Meter 1Addr:
                1
```

```
CT/Meter Setting
> Meter 2 Addr:
                2
```

```
CT/Meter Setting
> Meter 1Direction:
  Positive     Negative
```

```
CT/Meter Setting
> Meter 2 Direction:
  Positive     Negative
```

f) Self Test (only for CEI 0-21)
The self test function allows users to test the following items. "Full test", "Ovp(59.S2) test"27. "Uvp (s1) test", "Uvp (27. s2) test", "Ofp (81> .S1) test", "Ufp (81 <.S1) test", "Ufp (81> .S2) test", "Ufp (81 <.S2) test", "Ovp10 (59. s1) test".
In the self-test interface, the user can select "all tests" or a single test item for testing.
Before testing, make sure that the inverter is connected to the grid.
All tests take about 6 minutes. And it will display "Success" and then "Delivery".
For a single test item, it takes about a few seconds or minutes.
Click "Test Report" to view the test results of all items.

```
Self Test
ALL Test
Test report
Uvp(27.S1) test
```



```
>Ovp10(59.S1)result
Vt:  253.0V  Tt: 600ms
Vs:    0.0V  To: 598ms
V0:    0.0V        pass
```

```
>Ovp2(59.S2)result
Vt: 264.5V   Tt:  300ms
Vs:    0.0V  To:  200ms
V0:    0.0V        pass
```

```
>Ofp2(27.S2)result
Vt:  92.0V   Tt: 200ms
Vs:   0.0V   To: 196ms
V0:   0.2V    pass
```

```
>Uvp2(27.S1)result
Vt: 195.5V   Tt:  400ms
Vs:    0.0V  To:  200ms
V0:    0.0V        pass
```

```
>Ofp2(81>S1)result
Ft:  50.50Hz  Tt: 100ms
Fs:   0.00Hz  To:  96ms
F0:   0.2Hz         pass
```

```
>Ufp2(81<.S1)result
Ft:  49.50Hz  Tt: 100ms
Fs:   0.00Hz  To:  98ms
F0:   0.02Hz        pass
```

```
>Ufp2(81<.S2)result
Ft:  47.50Hz  Tt: 400ms
Fs:   0.00Hz  To: 3999ms
F0:   0.02Hz        pass
```

```
>Ofp2(81>.S2)result
Ft: 51.50Hz Tt:1000ms
Fs:  0.00Hz To:  998ms
F0:  0.00Hz    pass
```

g) Shadow Fix
Here, you can set the shadow tracking with four options, which are off, low, middle, and high.

```
Shadow Fix
> Func Select
              > Middle <
```

h) Modbus
Here you select the baud rate of the external communication protocol.

```
Modbus
Baud Rate:
              19200
```

```
Modbus
Address:
                1
```

I) External ATS
"Disable" is a default.

```
External ATS
Functional Control
Disable        Enable
```

j) Power Factor (applicable to specific countries, please refer to local grid requirements)

```
Power Factor
Mode Select
     >     Off      <
```

```
Power Factor
Mode Select
     >  Over-excited  <
```

Power Factor
Mode Select
> Under-Excited <

Power Factor
Mode Select
> Curve <

Power Factor
Mode Select
> Q(u) <

Power Factor
Mode Select
> Fixed Q Power <

Mode	Comment
Off	–
Over-Excited	PF value
Under-Excited	PF value
Curve	P1_PF
	P2_PF
	P3_PF
	P4_PF
	Power 1
	Power 2
	Power 3
	Power 4
	PFLockInPoint (EU50549 only)
	PFLockOutPoint (EU50549 only)
	3Tau
Q(u)	SetQuPower1
	SetQuPower2
	SetQuPower3
	SetQuPower4
	QuRespondV1(AS4777.2 only)
	QuRespondV2(AS4777.2 only)
	QuRespondV3(AS4777.2 only)
	QuRespondV4(AS4777.2 only)
	K
	3Tau
	QuDelayTimer
	QuLockEn
Fixed Q Power	Q Power

QuLockSetting
QuLockFunction
Enable Disable

QuLockSetting
QuLockIn
20%

QuLockSetting
QuLockOut
5%

k) PU Function (applicable to specific countries, please refer to local grid requirements)
The PU function is a volt-watt response mode required by certain national standards such as AS4777.2. This function can control the active power of the inverter according to the grid voltage.
Selecting "Enable" means that this function is turned on and is the default value.
Select "Disable" to deactivate the function.

PU Function
>PuFunction
Enable

PU Function
Response V2
220.0V

PU Function
Response V3
250.0V

PU Function
Response V4
265.0V

PU Function
3Tau
6~180S

PU Function
SetPuPower 1
100%

PU Function
SetPuPower 2
50%

PU Function
SetPuPower 3
0%

PU Function
SetPuPower 4
0%

PU Function
3Tau_Charge
10 S

PU Function
Pu Type
Static Dynamics

l) FVRT Function (apply to50549)
Here you can set the high and low FVRT enable or disable.

FVRT Function
Function Control
Disable Enable

m) Power Limit
Power limit function, the maximum AC output can be set in percentage.

Power Limit
>Proportion
1.00

- m) Reactive power control and reactive power standard curve cos φ = f(P)

For VDE ARN 4105, the curve cos φ = f(P) should refer to curve B. The set default value is shown in curve B.

For e8001, the curve cos φ = f(P) should be curve A. The set default value is shown in curve A.

For CEI 0-21, the default value of PFLockInPoint is 1.05. When Vac> 1.05Vn, Pac> 0.2 Pn, curve cos φ = f(P) corresponds to curve B.

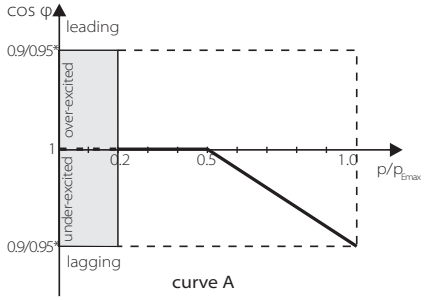

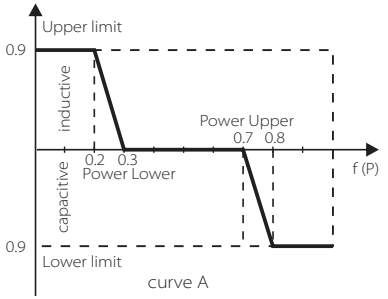

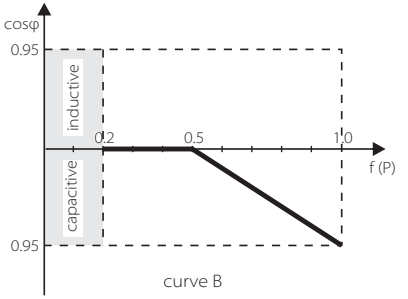

- Reactive power control, reactive power standard curve Q= f(V)

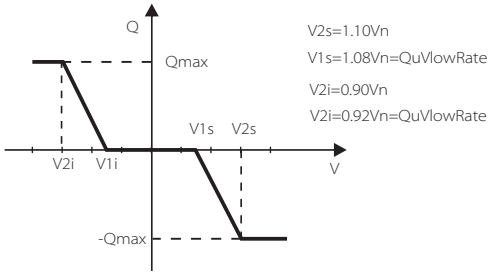

n) DRM function (applies to NZS4777.2)
The DRM function is a demand response method required by the NZS4777.2 standard and is only applicable to NZS4777.2.
The default value is "enable". Select "Disable" to disable this function.

DRM Function
>Function Control
Enable Disable

o) Parallel Setting

If a parallel operation is required, the user may set it with Parallel Setting.

Parallel Setting	
> Status Setting	Free
	> Master<

Parallel Setting	
> Status Setting	Free
	Free

o) Main Breaker Limit
In this section, you can set the maximum current according to the installed Smart Meter or CT which must be set in line with the utility's contract requirements. In case of wrong setup, it may cause a circuit breaker fault of main switchboard, adversely affecting the charging or discharging of battery. Click Main Breaker Limit to enter the setting interface, and then choose the corresponding amperage according to the utility's requirements.

Main Breaker Limit
>Current
40 A

q) Battery Heating
If the battery needs to be heated up, you can enable it in this section. Furthermore, you can schedule up to two heating periods (Only for batteries with heating function)

Battery Heating
>Func Select:
Enable Disable

Battery Heating
>Heating Period 1:
Start Time
00:00

Battery Heating
>Heating Period 1:
End Time
00:00

Battery Heating
>Heating Period 2:
Start Time
00:00

Battery Heating
>Heating Period 2:
End Time
00:00

r) EPS Setting

Please refer to this section to choose the EPS Mode frequency and minimum SOC.

EPS Setting	EPS Setting	EPS Setting
> Frequency	>Frequency	> Min SoC
50Hz	60Hz	10%

s) Phase Unbalanced

This function controls the distribution of AC output power.
"Enable" means each phase will be divided according to the loads connected to each phase. "Disable" will result in equal load distribution over all phases. Please note that "Disable"is the default setting value.

Phase Unbalanced
Function Control
Enable Disable

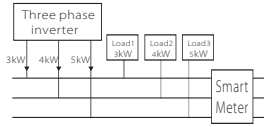

If 12kW AC power can be provided, each phase power will be divided as above according to the loads connected to each phase.

Enable Mode

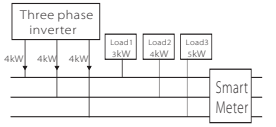

If 12kW AC power can be provided, each phase power will be divided equally as above and it is not adjusted to the loads on each phase.

Disable Mode

t) AS 4777 Setting

Same as the function of Export Control, but only applicable to Australia and New Zealand.

AS 4777 Setting	Export Control
>Export Control	Soft Limit
General Control	Enable Disable

Export Control	Export Control
Soft Limit Value	Hard Limit
300000 W	Enable Disable

Export Control	AS 4777 Setting
Hard Limit Value	Export Control
300000 W	> General Control

General Control	General Control
Soft Limit	Soft Limit Value
Enable Disable	300000 VA

General Control	General Control
Hard Limit	Hard Limit Value
Enable Disable	300000 VA

u) Reset

You can reset the error log, meter power, inverter power, and restore factory settings in this section.

Reset Error Log	Reset Meter/CT
>Reset	>Reset
Yes	Yes

Reset INV Energy	Factory Reset
>Reset	>Reset
Yes	Yes

Reset "Wi-Fi"
>Reset
Yes

v) Advanced Password

Here you can reset the advanced password. "Set OK!" is displayed on success, and "Setup Failed!" Will be displayed on failure.

Advance Password	Advance Password
Set OK!	Setup failed

w) ExternalGen

Setting path: Advanced Setting->ExternalGen->Function Control: Enable/Disable; Max Charge Power: ***W.
The chosen value of power must meet the following two conditions if the maximum charging power of batteries is to be control.
1) The value of "Max Charge Power" is less than the rated power of the generator minus the maximum load.
2) The value of "Max Charge Power" is less than or equals that of the rated AC capacity of the inverter.

External Gen	External Gen
Function Control	MaxChargePower
Enable Disable	5000W

➢ **About**

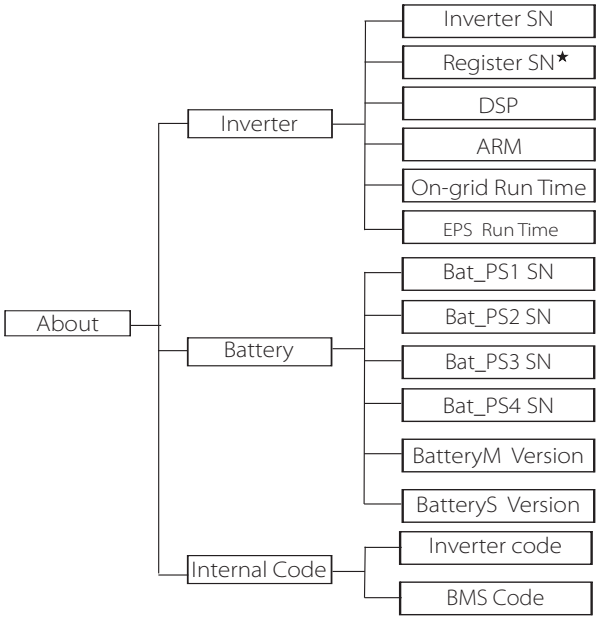

★ Register1 SN: Represents the serial number of external monitoring equipment, such as TommaTech Wi-Fi/LAN Dongle.

About

This section displays some basic information of the inverter and battery. such as the inverter and battery SN number, software version number, and system run time.

Inverter

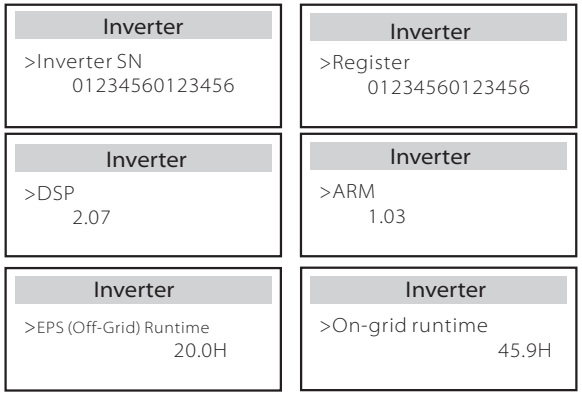

Battery

Battery	Battery
>BatBrand:BAK	>Bat-M SN 6S012345012345
Battery	**Battery**
>Bat-PS1 SN 6S012345012345	>Bat-PS2 SN 6S012345012345
Battery	**Battery**
>Bat-PS3 SN 6S012345012345	>Bat-PS4 SN 6S012345012345
Battery	**Battery**
>BatteryM Version 2.01	>BatteryS Version 2.01

Internal Code

Internal Code	Internal Code
>Inverter code 01 00 01 xx	>BMS code
Internal Code	**Internal Code**
>BAT-M 2.01	>BAT-S1 1.01 50
Internal Code	**Internal Code**
>BAT-S2 1.01 50	>BAT-S8 1.01 50

8 Troubleshooting

8.1 Troubleshooting

This section contains information and procedures for resolving possible challenges with Trio-Hybird K-Series Inverters, It will help you narrow down the source of any problems you may encounter. Please read the troubleshooting steps carefully.
Check the warning or fault information on the system control panel or the fault code on the inverter information panel. If a message is displayed, log it before doing anything further.
Try the solutions indicated in the table below.

Number	Faults	Diagnosis and solution
IE 001	TZ Protect Fault	Overcurrent fault. • Wait for a while to check if the inverter comes back to normal by itself. • Disconnect PV+, PV- and batteries and reconnect. • Otherwise, ask for help from the installer if it does not return to normal.
IE 002	Grid Lost Fult	• Check battery input voltage if it's within normal range • Otherwise, ask the installer for help.
IE 003	Grid Volt Fault	Power grid voltage overrun • Wait a moment, if the utility returns to normal, the system will reconnect. • Please check if the grid voltage is within normal range. • Otherwise, ask the installer for help.
IE 004	Grid Freq Fault	Electricity frequency beyond range • If the utility returns to normal, the system reconnects. • Otherwise, ask the installer for help.
IE 005	PV Volt Fault	PV voltage out of range • Check the output voltage of the PV panel • Otherwise, ask the installer for help.
IE 006	Bus Volt Fault	• Press the "ESC" key to restart the inverter. • Check if the PV input open circuit voltage is within the allowed range. • Otherwise, ask the installer for help.
IE 007	Bat Volt Fault	Battery voltage fault • Check battery input voltage if it's within normal range • Otherwise, ask the installer for help.
IE 008	AC10M Volt Fault	• The grid voltage was out of range in the last 10 minutes. • The system will return to normal if the grid returns to normal. • Otherwise, ask the installer for help.

Number	Faults	Diagnosis and solution
IE 009	DCI OCP Fault	DCI overcurrent protection fault. • Wait for a while to check if the inverter goes back to normal mode. • Otherwise, ask the installer for help.
IE 010	DCV OVP Fault	DCV EPS (Off-Grid) overvoltage protection failure. • Wait for a while to check if it's back to Normal Mode. • Otherwise, ask the installer for help.
IE 011	SW OCP Fault	Software Detection of Overcurrent Fault. • Wait for a while to check if the inverter goes back to Normal Mode. • Shut down PV input, battery and grid connections and restart • Otherwise, ask the installer for help.
IE 012	RC OCP Fault	Overcurrent protection fault. • Check the impedance of DC input and AC output. • Wait for a while to check if the inverter goes back to Normal Mode. • Otherwise, ask the installer for help.
IE 013	Isolation Fault	Insulation Fault • Please check the wire insulation for damage. • Wait for a while to check if the inverter goes back to Normal Mode. • Otherwise, ask the installer for help.
IE 014	Temp Over Fault	Temperature beyond limit • Check if ambient temperature exceeds the limit. • Otherwise, ask the installer for help.
IE 015	Bat Con Dir Fault	EPS (Off-Grid) Mode current is too strong. • Ensure that the connected loads are within the allowed) power range. • Check for any non-linear load connections. • Remove this load and restart the inverter. • Otherwise, ask for help from the installer.
IE 016	EPS (Off-grid) Overload Fault	EPS (Off-Grid) over load fault. • Shut down the most power consuming devices and press the "ESC" key to restart the inverter. • Ask for help from the installer if the inverter does not return to Normal Mode.
IE 017	OverLoad Fault	On-grid mode over load • Shutdown the high-power device and press the" ESC" key to restart the inverter. • Otherwise, ask for help from the installer if the inverter does not return to Normal Mode.
IE 018	BatPowerLow	• The most power consuming devices and press the "ESC" key to restart the inverter. • Please charge the battery to a level higher than the protection capacity or protection voltage
IE 019	BMS Lost	Battery communication loss • Check whether the communication lines between the battery and the inverter are properly connected. • Ask for help from the installer if the inverter does not return to Normal Mode.
IE 020	Fan Fault	Fan Fault • Check for any foreign matter that may have caused the fan not to function properly. • Otherwise, ask for help from the installer if the inverter does not return to Normal Mode.
IE 021	Low Temp	Low temperature fault. • Check if the ambient temperature is too low. • Ask for help from the installer if the inverter does not return to Normal Mode.

Number	Faults	Diagnosis and solution
IE 022	ARM Unmatched	ARM software version mismatch Fault • Update the software and press the "ESC" key to restart the inverter. • Ask for help from the installer if the inverter does not return to Normal Mode.
IE 023	Other Device Fault	Other device Fault • Update the software and press the "ESC" key to restart the inverter. • Ask for help from the installer if the inverter does not return to Normal Mode.
IE 025	InterComms Error	Mgr InterCom Fault • Disconnect PV input, battery and grid. Then reconnect. • Ask for help from the installer if the inverter does not return to Normal Mode.
IE 025	InterComms Error	Internal communication errors • Disconnect PV input, battery and grid connections. • Ask for help from the installer if the inverter does not return to Normal Mode.
IE 026	Inv EEPROM Fault	Inverter EEPROM Fault. • Disconnect the PV input, battery and grid. Then reconnect. • Ask for help from the installer if the inverter does not return to Normal Mode.
IE 027	RCD Fault	Fault of Residual Current Device • Check the impedance of DC input and AC output. • Disconnect PV +, PV - and batteries. Then reconnect. • Ask for help from the installer if the inverter does not return to Normal Mode.
IE 028	Grid Relay Fault	Electrical relay failure • Disconnect PV+, PV- grid and batteries and reconnect. • Ask for help from the installer if the inverter does not return to Normal Mode.
IE 029	EPS (Off-Grid) Relay Fault	EPS (Off-Grid) relay failure • Disconnect PV+, PV-, grid and batteries and reconnect. • Ask for help from the installer if the inverter does not return to Normal Mode.
IE 030	PV ConnDirFault	PV direction fault • Check if the PV input lines are connected in the right direction. • Ask for help from the installer if the inverter does not return to Normal Mode.
IE 031	ChargerRelayFault	Charge relay fault • Press the "ESC" key to restart the inverter. . • Ask for help from the installer if the inverter does not return to Normal Mode.
IE 032	EarthRaleyFault	EPS (Off-Grid) earth relay fault • Press the "ESC" key to restart the inverter. . • Ask for help from the installer if the inverter does not return to Normal Mode.
IE 101	PowerTypeFault	Power type fault • Upgrade the software and press the "ESC" key to restart the inverter. • Ask for help from the installer if the inverter does not return to Normal Mode.
IE 102	Port OC Warning	EPS (Off-Grid) port over current fault • Check that the EPS (Off-Grid) load does not exceed the system requirements, and press the "ESC" key to restart the inverter. . • Ask for help from the installer if the inverter does not return to Normal Mode.

Number	Faults	Diagnosis and solution
IE 103	Mgr EEPROM Fault	Manager EEEPROM Fault. • Disconnect PV input battery and grid and reconnect. • Ask for help from the installer if the inverter does not return to Normal Mode.
IE 104	DSPunmatched	DSP version error. • Check whether the DSP1 versions matches • Ask for help from the installer if the inverter does not return to Normal Mode.
IE 105	NTC Sample Invalid	NTC invalid • Make sure the NTC is properly connected and the NTC is in good condition. • Please confirm that the installation environment is normal • Ask for help from the installer if the inverter does not return to Normal Mode.
IE 106	Bat Temp Low	Battery temperature low • Check the battery installation environment to ensure good heat dissipation. • Ask for help from the installer if the inverter does not return to Normal Mode.
IE 107	Bat Temp High	Battery temperature high • Check the battery installation environment to ensure good heat dissipation. • Ask for help from the installer if the inverter does not return to Normal Mode.
IE 109	Meter Fault	Meter error • Please check that the Smart Meter is working properly • Ask for help from the installer if the inverter does not return to Normal Mode.
IE 110	BypassRaleyFault	Bypass relay fault • Press the the "ESC" key to restart the inverter. . • Ask for help from the installer if the inverter does not return to Normal Mode.
BE 001	BMS_External_Err	Battery Error - External Communication Fault • Please contact the battery supplier.
BE 002	BMS_Internal_Err	Battery Error - Internal Communication Fault • Please contact the battery supplier.
BE 003	BMS_OverVoltage	Over voltage in battery system • Please contact the battery supplier.
BE 004	BMS_LowerVoltage	Low voltage in battery system • Please contact the battery supplier.
BE 005	BMS_ChargeOCP	Battery fault - over charge fault • Please contact the battery supplier.
BE 006	BMS_DischargeOCP	Battery fault-discharge over current fault • Please contact the battery supplier.
BE 007	BMS_TemHigh	Over temperature in battery system • Please contact the battery supplier.
BE 008	BMS_TempSensor Fault	Battery temperature sensor malfunction • Please contact the battery supplier.

Number	Faults	Diagnosis and solution
BE 009	BMS_CellImblance	Battery Unbalanced Failure • Please contact the battery supplier.
BE 010	BMS_Hardware Protect	Battery hardware protection failure • Please contact the battery supplier.
BE 011	BMS_Circuit_Fault	Battery circuit failure • Restart the battery . • Please contact the battery supplier.
BE 012	BMS_ISO_Fault	Battery insulation failure • Check that the battery is properly grounded and restart the battery. • Please contact the battery supplier.
BE 013	BMS_VolSen_Fault	Battery voltage sensor fault • Please contact the battery supplier.
BE 014	BMS_TemppSen_Fault	Temperature sensor failure • Restart the battery . • Please contact the battery supplier.
BE 015	BMS_CurSensor Fault	Battery current sensor fault • Please contact the battery supplier.
BE 016	BMS_Relay Fault	Battery relay failure • Please contact the battery supplier.
BE 017	BMS_Type_Unmatch	Battery type failure • Upgrade the battery BMS software. • Please contact the battery supplier.
BE 018	BMS_Ver_ Unmatch	Battery version mismatch failure • Upgrade the battery BMS software. • Please contact the battery supplier.
BE 019	BMS_MFR_ Unmatch	Battery manufacturer did not match the fault • Upgrade the battery BMS software. • Please contact the battery supplier.
BE 020	BMS_SW_ Unmatch	Battery hardware and software mismatch failure • Upgrade the battery BMS software. • Please contact the battery supplier.
BE 021	BMS_M&S_ Unmatch	Battery master slave control mismatches • Upgrade the battery BMS software. • Please contact the battery supplier.
BE 022	BMS_CR_ NORespond	Battery charging request does not respond to a fault • Upgrade the battery BMS software. • Please contact the battery supplier.
BE 023	BMS_SW_ Protect	Battery slave software protection failure • Upgrade the battery BMS software. • Please contact the battery supplier.
BE 024	BMS_536_Fault	Battery fault-discharge over current fault • Please contact the battery supplier.
BE 025	BMS_SelfcheckErr	Over temperature in battery system • Please contact the battery supplier.

Number	Faults	Diagnosis and solution
BE 026	BMS_TempdiffErr	Battery temperature sensor malfunction • Please contact the battery supplier.
BE 027	BMS_BreakFault	Battery Unbalanced Failure • Please contact the battery supplier.
BE 028	BMS_Flash_Fault	Battery hardware protection failure • Please contact the battery supplier.
BE 029	BMS_Precharge_Fault	Battery precharge failure • Please contact the battery supplier.
BE 030	BMS_AirSwitch_Fault	Battery air switch failure • Check that the battery breaker is off. • Please contact the battery supplier.

• If the fault LED on the control panel does not shine, please check the following list to ensure the current status of the installation.

------ Is the inverter located in a clean, dry and well-ventilated place?
------ Is the DC input circuit breaker open?
------ Is the specification and length of the cable adequate?
------ Are the input and output connections and wiring in good condition?
------ Is the configuration set correctly for your particular installation?

Please contact TommaTech customer service for further assistance. Please be prepared to describe the details of your installation and provide the inverter serial number.

8.2 Routine Maintenance

TommaTech Trio Hybrid K-Series Inverters do not require any regular maintenance or correction . However, if the inverter often loses power due to overheating, this can be attributed to the following reason:

• The heat sink behind the inverter is covered with dirt.
If necessary, clean the cooling heat sink with a soft dry cloth or brush. Please note that only trained and authorized professionals familiar with safety requirements can perform maintenance work on the inverter.

➢ Safety inspections

Safety checks should be conducted at least every 12 months, please contact the manufacturer to arrange for appropriate training, expertise, and practical experience in performing these tests. (Please note that this action is not covered by warranty). These data should be recorded in the device log. If the equipment is not running properly or any test fails, the equipment must berepaired. Please refer to section 1 of this manual for safety instructions and europe commission instructions.

➢ Regular maintenance

Only qualified people can do the following work.
In the process of using frequency converter, the manager should check and maintain the inverter regularly. The specific operation is as follows:

1. Check whether the heat sink is covered with dirt, clean the machine and absorb dust if necessary. This work should be performed from time to time.

2. Check whether the frequency converter indicator is normal, whether the frequency converter button is normal and whether the frequency converter display is normal. This inspection should be conducted at least every 6 months.

3. Check the input and output lines for damage or aging. This inspection should be conducted at least every 6 months.

4. Cleaning and safety inspection of PV modules should be carried out at least once every 6 months.

9 Decommissioning

9.1 Dismantle the Inverter

- Remove DC input line and AC output line of inverter.
- Wait for at least 5 minutes to switch off the inverter.
- Disconnect all cables from the inverter.
- Remove inverter from the bracket if necessary.

9.2 Packing

Load the inverter into the original package.

- If the original package can not be found, you can also use another carton with the specifications as outlined below:
  Bearing capacity of more than 30 kg.
  Easy to carry.
  Completely sealed cover.

9.3 Storage and Transportation

Store the inverter in a dry environment with temperatures between -40℃~70℃ environment. Please do not stack more than four inverters for storage and transport.

9.4 Waste Disposal

If it is necessary to scrap the inverter or other related parts, be sure to send the inverter and packaging materials to a designated location for recycling.

10 Disclaimer

The Trio-Hybrid K series hybrid inverters are transported, used and operated under limited condition, such as environmental, electrical installation etc. TommaTech shall not be liable to provide any service, technical support or compensation under conditions, including but not limited to:

- The inverter is damaged or broken by force majeure (such as earthquake, flooding, thunderstorm, lighting, fire hazard, volcanic eruption etc).
- The inverter's warranty is expired.
- The customer can't provide the inverter's SN, warranty card or invoice.
- The inverter is damaged by man-made cause. For example, if the
- inverter is used or operated against local requirements.
- The inverter's installation, configuration or commissioning doesn't follow the requirements mentioned in this manual.
- The inverter is installed, refitted or operated in improper ways as defined in this manual without authority from TommaTech.
- The inverter is installed or operated in improper environment or electrical condition as defined in this manual without authority from TommaTech.
- The inverter is changed, updated or disassembled without authority from TommaTech.
- If the communication protocol is obtained from other channels.
- Incorporating the inverter into monitoring or control systems without authority from TommaTech.
- The inverter is connected to batteries from other brands without authority from TommaTech.

TommaTech will keep right to change the contents in this user manual without prior notice.